Appleton®

DICOM INGENIEROS S.R.L.

Materiales eléctricos
Industriales

GUÍA DE
FICHAS TÉCNICAS

PRODUCTOS ELECTRICOS



MINERIA · ENERGIA · CONSTRUCCIÓN · HIDROCARBUROS · INDUSTRIA · TELECOMUNICACIONES · INFRAESTRUCTURA Y TRANSPORTE

Escanea el QR
Visita nuestro **Catálogo**

Siguenos en **nuestras redes**

+51 991 872 290

FS and FD Cast Hub Device Boxes

UNILETS™ for use with Threaded Rigid Conduit and IMC. All Device Boxes have Ridge Top Construction. Furnished with Internal Ground Screw.

NEC: Listed for Ordinary (Unclassified) Locations

Applications

- Accommodate wiring devices such as switches and receptacles.
- Provide excellent service in areas where boxes are subject to rough usage.
- Serve as pull boxes for conductors.
- Permit access to conductors for maintenance.
- Provide openings for making splices.
- Allow connections for branch conduit runs.
- Blank bodies for special conduit entrance arrangements.

Features

- Corrosion-resistant — ideal for indoor and outdoor installations.
- Weatherproof, raintight and dust-tight when used with cast gasketed covers.
- FS and FD boxes take standard flush wiring devices.
- FD boxes take devices exceeding 41.4 mm (1.63 in) in depth under fastening ears.
- Malleable iron for high tensile strength and ductility — provides greater resistance to impact and shock.
- Both malleable iron and aluminum boxes have ridge top construction for positive cover/gasket/box fit.
- Accurately tapped, tapered threads for tight, rigid joints, ground continuity.
- Complete selection of covers, receptacles, plugs, gaskets and accessories.
- Covers have captive stainless steel screws to speed installation, prevents loss of screws.
- Internal grounding screws standard.
- Available in single, two and three gang and tandem.
- Smooth, rounded integral bushing in each hub protects conductor insulation.

Standard Materials

- Boxes: malleable iron or copperfree (4/10 of 1% max.) aluminum
- Covers: malleable iron, steel, or copperfree (4/10 of 1% max.) aluminum
- Screws: stainless steel
- Gaskets: neoprene

Standard Finishes

- Malleable iron boxes and covers: triple-coat — (1) zinc electroplate, (2) chromate, and (3) epoxy powder coat
- Aluminum boxes and covers: epoxy powder coat
- Steel covers: zinc electroplate

NEC Certifications and Compliances

- UL Standard: 514A
- UL Listed: E2527
- NEMA Standard: FB-1



Illustrated Features



Gasket is designed so that it wraps around ridge top of Appleton aluminum or malleable iron device box. Result is a positive seal against moisture.



Gasket construction. Cover tightens on largest perimeter of gasket and fits snugly against portion of gasket that wraps around ridge top of box.

FS and FD Cast Hub Device Boxes

UNILETS™ for use with Threaded Rigid Conduit and IMC. All Device Boxes have Ridge Top Construction. Furnished with Internal Ground Screw.

NEC: Listed for Ordinary (Unclassified) Locations

FS Box (Shallow) 2.00" deep, FD Box (Deep) 2.69" deep, ED (Extra Deep) 3.06" deep

	Type	Depth	Trade Size (Inches)	Catalog Number Malleable Iron Ridge Top	Aluminum Ridge Top
	FS	Shallow	1/2	APPFS150	APPFS150A
			3/4	APPFS175	APPFS175A
			1	APPFS1100	FS1100A
	FD	Deep	1/2	APPFD150	APPFD150A
			3/4	APPFD175	APPFD175A
			3/4	APPFD175ED	APPFD175AED
	FSC	Shallow	1/2	APPFSC150	FSC150A
			3/4	APPFSC175	FSC175A
			1	APPFSC1100	FSC1100A
	FDC	Deep	1/2	FDC150	APPFDC150A
			1/2	APPFDC150ED	—
			3/4	FDC175	APPFDC175A
			3/4	FDC175ED	APPFDC175AED
	FSS	Shallow	1/2	FSS150	FSS150A
			3/4	FSS175	APPFSS175A
	FDS	Deep	1/2	FDS150	FDS150A
			3/4	FDS175	FDS175A
			1	FDS1100	FDS1100A
	FSLA	Shallow	1/2	FSLA150	—
			3/4	FSLA175	—
	FSCA	Shallow	1/2	FSCA150	—
			3/4	FSCA175	—
	FSCC	Shallow	1/2	FSCC150	—
			3/4	FSCC175	—
	FDCC	Deep	1/2	APPFDCC150	FDCC150A
			3/4	APPFDCC175	FDCC175A
			3/4	APPFDCC175ED	—
			1	FDCC1100	—

Shaded boxes include mounting feet (feet not shown for boxes on this page).

EMERSON

Visit our website at **www.appleton.emerson.com**.
Contact us at **(800) 621-1506** or **+33 3 22 54 13 90**. | © September 2026

APPLETON

FS and FD Cast Hub Device Boxes

UNILETS™ for use with Threaded Rigid Conduit and IMC. All Device Boxes have Ridge Top Construction. Furnished with Internal Ground Screw.

NEC: Listed for Ordinary (Unclassified) Locations

FS Box (Shallow) 2.00" deep, FD Box (Deep) 2.69" deep, ED (Extra Deep) 3.06" deep

	Type	Depth	Hub Size (Inches)	Catalog Number Malleable Iron Ridge Top	Aluminum Ridge Top
	FSCT	Shallow	1/2	**FSCT150**	**FSCT150A**
			3/4	**FSCT175**	**FSCT175A**
			1	**FSCT1100**	—
	FDCT	Deep	1/2	**APPFDCT150**	—
			3/4	**APPFDCT175**	**FDCT175A**
			3/4	**APPFDCT175ED**	—
			1	**APPFDCT1100**	—
			1	**APPFDCT1100ED**	—
	FST	Shallow	1/2	**FST150**	—
			3/4	**FST175**	—
	FDT	Deep	1/2	**FDT150**	—
			3/4	**FDT175**	**FDT175A**
			1	**FDT1100**	—
	FSX	Shallow	1/2	**FSX150**	—
			3/4	**FSX175**	—
	FDX	Deep	1/2	**APPFDX150**	—
			1/2	**APPFDX150ED**	—
			3/4	**APPFDX175**	—
			3/4	**APPFDX175ED**	—
			1	**FDX1100**	—
	FSCD	Shallow	1/2	**FSCD150**	—
			3/4	**FSCD175**	—
FS and FD Single Gang Boxes with Mounting Lugs					
	FS	Shallow	1/2	**FS150L**	—
			3/4	**FS175L**	—
	FD	Deep	1/2	**FD150L**	**FD150LA**
			3/4	**FD175L**	**FD175LA**
			1	**APPFD1100**	**FD1100A**
			1	**APPFD1100ED**	—
	FSC	Shallow	1/2	**FSC150L**	—
			3/4	**FSC175L**	—
	FDC	Deep	1/2	**FDC150L**	**FDC150LA**
			3/4	**FDC175L**	**FDC175LA**
			1	**APPFDC1100**	**FDC1100A**
			1	**APPFDC1100ED**	—

Shaded boxes include mounting feet (feet not shown for boxes on this page).

FS and FD Cast Hub Device Boxes

UNILETS™ for use with Threaded Rigid Conduit and IMC. All Device Boxes have Ridge Top Construction. Furnished with Internal Ground Screw.

NEC: Listed for Ordinary (Unclassified) Locations

FS Box (Shallow) 2.00" deep, FD Box (Deep) 2.69" deep, ED (Extra Deep) 3.06" deep

	Type	Depth	Hub Size (Inches)	Catalog Number Malleable Iron Ridge Top	Aluminum Ridge Top
FS Single Gang Boxes with Double Opening					
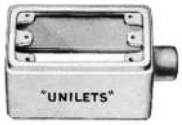	FS	3.38"	1/2	**FS1D50**	—
			3/4	**FS1D75**	**FS1D75A**
	FSC	3.38"	1/2	**FSC1D50**	—
			3/4	**FSC1D75**	—
FS Two-Gang Tandem Boxes —Takes single gang covers					
	FS	Shallow	1/2	**FS2T50**	—
			3/4	**APPFS2T75**	—
	FSC	Shallow	1/2	**FSC2T50**	—
			3/4	**FSC2T75**	—
	FS	1" Extension	–	**FS1EXT**	—

	Description	Catalog Number Steel	Aluminum
Covers for Ridge Top Boxes. — Less Gasket			
	For double push button switches, momentary contact and maintain switches.	**FSK1PB**	—
	For square handle tumbler or toggle switches.	**FSK1TS**	**FSK1TSA**
	For square handle tumbler or toggle switches. Has toggle guard.	**FSK1TSG**	—
	For two or three interchangeable devices. Includes mounting bracket.	**FSK1WD3**	—

FS and FD Cast Hub Device Boxes

UNILETS™ for use with Threaded Rigid Conduit and IMC. All Device Boxes have Ridge Top Construction. Furnished with Internal Ground Screw.

NEC: Listed for Ordinary (Unclassified) Locations

	Description	Catalog Number Steel	Aluminum
Covers for Ridge Top Boxes. — Less Gasket			
	For round flush receptacles, without lift cover. Mounts on device. Hole Dia.—1-13/32".	**FSK1RQ**	**FSK1RQA**
	For round flush receptacles, with lift cover. Mounts on device. Hole Dia.—1-13/32".	**FSK1RT**	—
	For round receptacles. Mounts directly on box. Hole Dia.—1-13/32".	**FSK1RW**	**FSK1RWA**
	For round receptacles. Mounts directly on box. Hole Dia.—1-5/8". 3-9/32" C to C screw holes.	**FSK1RX**	—
	For round receptacles. Mounts on device. Hole Dia.—1-5/8". 2-3/8" C to C screw holes.	**FSK1RY**	**FSK1RYA**
	For standard 2 or 3 wire duplex receptacles.	**FSK1DR**	**FSK1DRA**
	For pilot lamp: Red Jewel Amber Jewel Green Jewel Opal Jewel	 **FSK1J** **FSK1JA** **FSK1JG** **FSK1J0**	 — — — —
	Blank	**FSK1B**	FSK1BA
Cast Covers NEMA 3R Wet Locations — Furnished with gasket and stainless steel screws			
	Receptacle cover with spring cover. Hole Diameter — 1-7/16"	**FSK1VR**	**FSK1VR**
	For duplex flush receptacle with spring cover	**FSK1VDR**	**FSK1VDRA**
	For pilot lamp flush receptacles: Red Jewel Opal Jewel Amber Jewel Green Jewel	 **FSK1JC** **FSK1J0C** **FSK1JAC** **FSK1JGC**	 **FSK1JCA** **FSK1J0CA** **FSK1JACA** **FSK1JGCA**

FS and FD Cast Hub Device Boxes

Covers for Ridge Top Boxes.

UNILETS™ for use with Threaded Rigid Conduit and IMC. All Device Boxes have Ridge Top Construction. Furnished with Internal Ground Screw.

NEC: Listed for Ordinary (Unclassified) Locations

	Description	Catalog Number Malleable Iron	Aluminum
Cast Covers NEMA 3R Wet Locations — Furnished with gasket and stainless steel screws			
	For double push button switches	**FSK1PBS**	—
	For external operation of tumbler switches with square handles	**FSK1VTS**	**FSK1VTSA**
	Operating type for square handle tumbler or toggle switches	**FSK1VS**	**FSK1VSA**
	Rocker type for square handle tumbler or toggle flush switches	**FSK1V**	**FSK1VA**
	Blank	**FSK1BC**	**FSK1BCA**
Gasket — Replacement			
	Neoprene—for use with wet location covers	**FSGKR1N**	**FSGKR1N**
Cast Covers Dry Locations — Furnished with stainless steel screws less gasket			
	For standard 2 or 3 wire duplex receptacles	**FSK1DRC**	—
	For round flush receptacles Hole Dia. — 1-7/16”	**FSK1RZ**	—
	For square handle toggle switches	**FSK1TSC**	—
	For square handle toggle switches; Has toggle guard	**FSK1TSGC**	**FSK1TSGCA**

FS and FD Cast Hub Device Boxes

UNILETS™ for use with Threaded Rigid Conduit and IMC. All Device Boxes have Ridge Top Construction. Furnished with Internal Ground Screw.

NEC: Listed for Ordinary (Unclassified) Locations

Wiring Capacity

	Capacity — dm³ (in³)		
Hub Size (Inches)	FS — Single-Gang	FD — Single-Gang	FS — Two-Gang Tandem
1/2	0.29 (18.00)	0.41 (25.00)	0.66 (40.00)
3/4	0.29 (18.00)	0.41 (25.00)	0.66 (40.00)
1	0.29 (18.00)	0.41 (25.00)	0.66 (40.00)

Dimensions in Millimeters (Inches)

FS and FD Single Gang Boxes without lugs

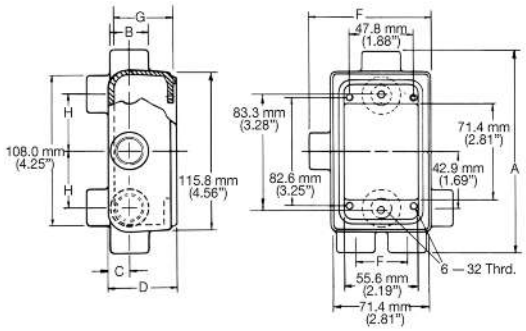

FS Tandem Boxes

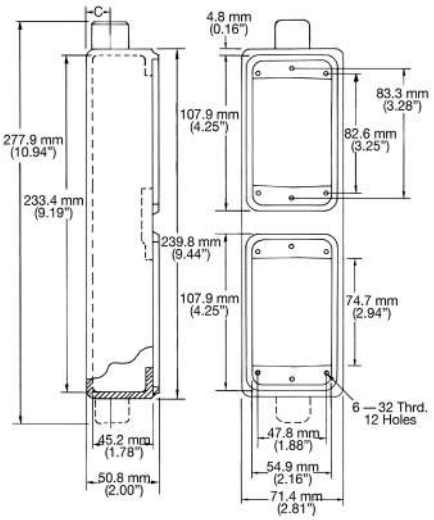

FS and FD Single Gang Boxes with lugs

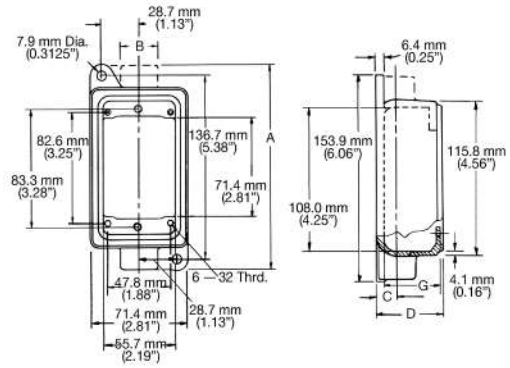

Hub Size (Inches)	A	B	C	D "FS"	D "FD"	E	F	G "FS"	G "FD"	H
1/2	149.4 (5.88)	28.7 (1.13)	16.0 (0.63)	50.8 (2.00)	68.3 (2.69)	38.1 (1.50)	88.9 (3.50)	45.2 (1.78)	62.0 (2.44)	42.9 (1.69)
3/4	149.4 (5.88)	35.1 (1.38)	19.1 (0.75)	50.8 (2.00)	68.3 (2.69)	52.3 (2.06)	88.9 (3.50)	45.2 (1.78)	62.0 (2.44)	38.1 (1.50)
1	160.3 (6.31)	42.9 (1.69)	23.9 (0.94)	50.8 (2.00)	68.3 (2.69)	52.3 (2.06)	88.9 (3.50)	45.2 (1.78)	62.0 (2.44)	35.1 (1.38)

FS and FD Cast Hub Device Boxes

Wet Location Receptacle Covers Available with NEMA Configuration Receptacles or as Covers Only
Covers also accommodate Toggle Switches.

NEC: NEMA 3R

Applications

- Meet NEC 406.8(B) receptacle requirements for wet locations: "A receptacle installed outdoors where exposed to weather or in other wet locations shall be in a weatherproof enclosure, the integrity of which is not affected when the receptacle is in use (attachment plug cap inserted)."
- For industrial, commercial or residential use as a general purpose receptacle or for powering portable equipment not exceeding medium duty ratings.
- Mounts on FS or FD device boxes or equivalents, either single gang or multiple gang with single gang openings.

Features

- Provides full protection in damp or wet locations per NEC 406.8(B). Gasketed spring door cover closes tightly automatically to protect receptacle from moisture and dirt when not in use. With plug inserted, a heavy-duty gasket in throat of receptacle seals around it to keep out moisture and dirt.
- Receptacle interiors comply with NEMA Standards WD-1 and WD-5.
- Receptacle interiors are specification grade, back and side-wired.
- Single cover units accommodate NEMA configuration receptacles for locking or non-locking blade plugs, or toggle switches. Duplex units accommodate one receptacle and one toggle switch or any combination of the two.
- Covers open all the way, permitting easy plug insertion and withdrawal. Also permits adequate access to cover screws for easy attachment of cover to FS, FD or other device box. Large head cover screws are captivated.
- Unique design of spring door hinge provides smooth action. Duplex units have a separate hinge shaft for each spring door cover to reduce stress on the shafts.
- Spring door cover puts pressure on plug (without tilting plug) to hold plug in best position for providing optimum weatherproof seal.
- Stainless steel hinge springs are completely enclosed — inside and out — for superior resistance against corrosion.
- EPDM gaskets provide superior resistance to the weather, ozone and temperatures between -45.6 °C and +126.7 °C (-50.08 °F and +260 °F).



Duplex Cover on FS Box.



Single Cover on FS Box.

- Diecast copperfree cover assemblies with epoxy powder coat (electrostatically applied for uniform coverage) to provide protection against corrosion.
- Positive ground path assured for all exposed metal parts.
- Receptacle interiors grounded through an extra contact in all types. Self-grounded in duplex units.

Standard Materials

- Cover and faceplate: diecast copperfree (4/10 of 1%) aluminum
- Gaskets: ethylene propylene rubber (EPDM)
- Cover and device screws: stainless steel, 6—32 thread
- Hinge springs: stainless steel
- Hinge shaft: nylon
- FSK-SBA adapter: steel plate with closed cell sponged neoprene gasket

Standard Finishes

- Cover and faceplate: epoxy powder coat
- FSK-SBA adapter: zinc electroplate

NEC Certifications and Compliances

- UL Standard: 514A
- UL Listed: E2527, E3439
- NEMA Standards: FB-1, OS-1

Illustrated Features



Typical application with NEMA configuration receptacle and plug, mounted on an FS box. Gasket seals around plug, keeping out moisture and dirt. Spring door closes automatically when plug is withdrawn to protect receptacle.

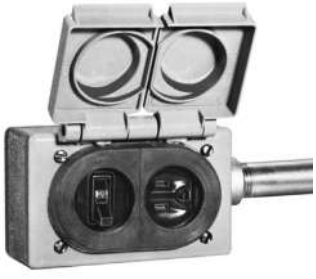

Spring doors open wide for easy plug insertion and cover assembly (covers shown in open position for illustration only). This view shows gaskets that protect plugs. Gasket on bottom of cover prevents entry of moisture into device box (see gasket description).



Receptacle Cover mounted on Switch Box with FSK-SBA Adapter/Gasket

FS and FD Cast Hub Device Boxes

Wet Location Receptacle Covers Available with NEMA Configuration Receptacles or as Covers Only

Covers also accommodate Toggle Switches.

NEC: NEMA 3R

	Amp	Wire/Pole	Volts	NEMA Configuration	Catalog Number With Receptacle	Cover Only
 FSK-WRD ①	**Duplex Cover for Non-Locking Blade Plugs, with 1-3/8 Device Opening**					
	15	2P, 3W	125	5-15R	**FSKD515**	**FSKWRD**
	15	2P, 3W	250	6-15R	**FSKD615**	**FSKWRD**
	20	2P, 3W	125	5-20R	**FSKD520**	**FSKWRD**
	20	2P, 3W	250	6-20R	**FSKD620**	**FSKWRD**
 FSK-WR1 ①	**Single Cover for Non-Locking and Locking Blade Plugs, with 1-3/8" Device Opening**					
	15	2P, 3W	125	5-15R	**FSKJ515**	**FSKWR1**
	15	2P, 3W	250	6-15R	**FSKJ615**	**FSKWR1**
	20	2P, 3W	125	5-20R	**FSKJ520**	**FSKWR1**
	20	2P, 3W	250	6-20R	**FSKJ620**	**FSKWR1**
	15	2P, 3W	125	L5-15R	**FSKJL515**	**FSKWR1**
	15	2P, 3W	250	L6-15R	**FSKJL615**	**FSKWR1**
	15	2P, 3W	277	L7-15R	**FSKJL715**	**FSKWR1**
 FSK-WR2 ①  FSK-WGF1 ①  FSK-WT2 ①	**Single Cover for Locking. Blade Plugs, with 1-19/32" Device Opening**					
	Accommodates NEMA configuration receptacles with 1-19/32" device opening.				—	**FSKWR2**
	Single Cover for GFI — Meets NEMA 3R Wet Location in Closed Position Only					
	GFI Cover Only				—	**FSKWGF1**
	Single Cover for Toggle Switches (1-19/32" opening)					
	Accommodates Toggle Switch. Furnished with Toggle Switch Plate to provide protection from exposed terminal wires of Toggle Switch.				—	**FSKWT2**
	**Adapter/Gasket**					
	For mounting Receptacle Cover on Switch Boxes (not required on FS/FD Boxes)					**FSKSBA**

Dimensions in Millimeters (Inches)

Single

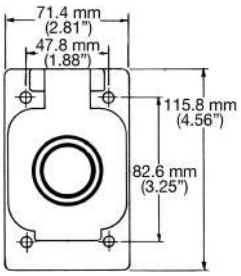

Duplex

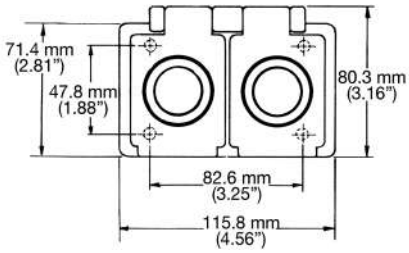

NOTE: All receptacle covers have an overall height of 29.5 mm (1.16 in).

① *Covers shown in open position for illustration only. Spring door closes automatically when plug is withdrawn.*

FS and FD Cast Hub Device Boxes

UNILETS™ for use with Threaded Rigid Conduit and IMC. All Device Boxes have Ridge Top Construction. Furnished with Internal Ground Screw.

NEC: Listed for Ordinary (Unclassified) Locations

FS Box (Shallow) 2.00" deep, FD Box (Deep) 2.69" deep, ED (Extra Deep) 3.06" deep

	Type	Depth	Hub Size (Inches)	Catalog Number Malleable Iron Ridge Top	Catalog Number Aluminum Ridge Top
	FS	Shallow	1/2	**APPFS250**	**FS250A**
			3/4	**APPFS275**	**APPFS275A**
			1	**APPFS2100**	—
	FD	Deep	1/2	**APPFD250**	—
			1/2	**APPFD250ED**	—
			3/4	**APPFD275**	**FD275A**
			3/4	**APPFD275ED**	—
			1	**APPFD2100**	—
			1	**APPFD2100ED**	—
	FSC	Shallow	1/2	**APPFSC250**	—
			3/4	**APPFSC275**	**FSC275A**
			1	**APPFSC2100**	—
	FDC	Deep	1/2	**FDC250**	—
			1/2	**FDC250ED**	—
			3/4	**FDC275**	**FDC275A**
			3/4	**FDC275ED**	—
			1	**FDC2100**	—
			1	**FDC2100ED**	—
	FSS	Shallow	1/2	**FSS250**	—
			3/4	**FSS275**	**FSS275A**
			1	**FSS2100**	—
	FDS	Deep	3/4	**FDS275**	—
	FSD	Shallow ①	1/2-3/4	**FSD275**	—
	FS	1" Extension ②	–	**FS2EXT**	—

① *Largest hub at bottom in illustration.*
② *Extension does not have a ground screw.*

Shaded boxes include mounting feet (feet not shown for boxes on this page).

EMERSON
Visit our website at **www.appleton.emerson.com**.
Contact us at **(800) 621-1506** or **+33 3 22 54 13 90**. | © September 2026
APPLETON

FS and FD Cast Hub Device Boxes

UNILETS™ for use with Threaded Rigid Conduit and IMC. All Device Boxes have Ridge Top Construction. Furnished with Internal Ground Screw.

NEC: Listed for Ordinary (Unclassified) Locations

	Description	Catalog Number Steel	Aluminum
Stamped Steel and Aluminum Covers — With stainless steel screws, less gasket			
	For square handle tumbler or toggle flush switches	**FSK2TS**	**FSK2TSA**
	For two round receptacles. Mounts on device. Hole Dia. – 1-13/32”	**FSK2RQ**	—
	For two round receptacles. Mounts directly on box. Hole Dia. – 1-13/32”	**FSK2RW**	—
	For round flush receptacles, with lift cover. Mounts on device. Hole Dia. – 1-13/32”	**FSK2RT**	—
	For duplex flush receptacles	**FSK2DR**	**FSK2DRA**
	For tumbler flush switch and duplex flush receptacles	**FSK2RSK**	—
	For round flush receptacle and duplex receptacles Hole Dia. – 1-13/32”	**FSK2RL**	—
	For round receptacles. Hole Dia. – 2-15/32	**FSK2RM**	—
	Blank Cover	**FSK2B**	**FSK2BA**
		Malleable Iron	**Aluminum**
Cast Covers — Weatherproof — With gasket and stainless steel screws			
	Blank Cover	**FSK2BCM**	**FSK2BCA**
	Gasket — Replacement Neoprene — for use with 2-gang cast covers above	**FSGKR2N**	—

FS and FD Cast Hub Device Boxes

UNILETS™ for use with Threaded Rigid Conduit and IMC. All Device Boxes have Ridge Top Construction. Furnished with Internal Ground Screw.

NEC: Listed for Ordinary (Unclassified) Locations

Wiring Capacity

	Capacity — dm^3 (in^3)	
Hub Size (Inches)	**FS**	**FD**
1/2	0.52 (32.00)	0.74 (45.00)
3/4	0.52 (32.00)	0.74 (45.00)
1	0.52 (32.00)	0.74 (45.00)

Dimensions in Millimeters (Inches)

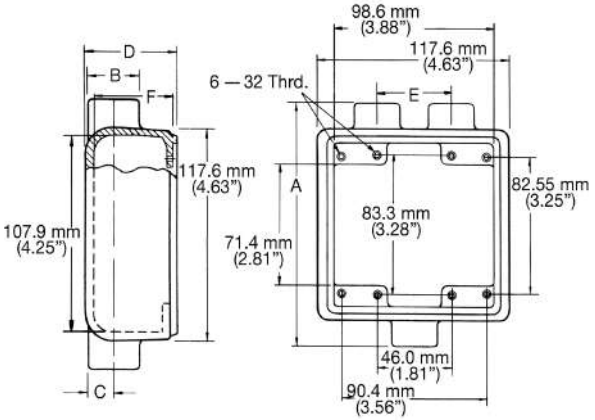

Hub Size (Inches)	A	B	C	D "FS"	D "FD"	E	F "FS"	F "FD"
1/2	149.4 (5.88)	28.7 (1.13)	16.0 (0.63)	50.8 (2.00)	68.3 (2.69)	47.8 (1.88)	45.2 (1.78)	62.0 (2.44)
3/4	149.4 (5.88)	35.1 (1.38)	19.1 (0.75)	50.8 (2.00)	68.3 (2.69)	47.8 (1.88)	45.2 (1.78)	62.0 (2.44)
1	160.3 (6.31)	42.9 (1.69)	23.9 (0.94)	50.8 (2.00)	68.3 (2.69)	52.3 (2.06)	45.2 (1.78)	62.0 (2.44)

FS and FD Cast Hub Device Boxes

UNILETS™ for use with Threaded Rigid Conduit and IMC. All Device Boxes have Ridge Top Construction. Furnished with Internal Ground Screw.

NEC: Listed for Ordinary (Unclassified) Locations

Three Gang Cast Device Boxes

	Type	Depth	Hub Size (Inches)	Catalog Number Malleable Iron Ridge Top
	FS	Shallow	3/4	**FS375**
			1	**FS3100**
	FSS	Shallow	3/4	**FSS375**

Cast Device Covers

	Description	Catalog Number
Stamped Steel Covers — Furnished with stainless steel screws, less gasket		
	For square handle tumbler or toggle flush switches	**FSK3TS**
	Blank Cover	**FSK3B**
Malleable Iron Cast Covers — Weatherproof — Furnished with gasket and stainless steel screws		
	Blank Cast Cover	**FSK3BCM**
Gasket — Replacement		
	Neoprene — for use with 3-gang covers above	**FSGKR3N**

FS and FD Cast Hub Device Boxes

UNILETS™ for use with Threaded Rigid Conduit and IMC. All Device Boxes have Ridge Top Construction. Furnished with Internal Ground Screw.

NEC: Listed for Ordinary (Unclassified) Locations

Wiring Capacity

	Capacity — dm^3 (in^3)
Hub Size (Inches)	FS
1/2	0.66 (40.00)
3/4	0.66 (40.00)
1	0.66 (40.00)

Dimensions in Millimeters (Inches)

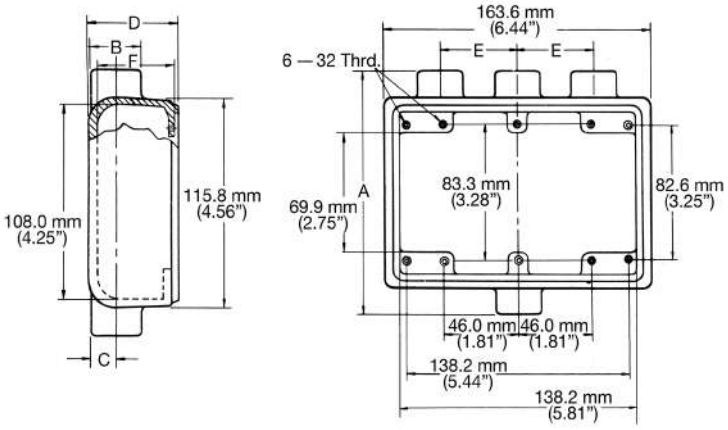

Hub Size (Inches)	A	B	C	D	E	F
1/2	149.4 (5.88)	28.7 (1.13)	16.0 (0.63)	50.8 (2.00)	47.8 (1.88)	45.2 (1.78)
3/4	149.4 (5.88)	35.1 (1.38)	19.1 (0.75)	50.8 (2.00)	47.8 (1.88)	45.2 (1.78)
1	190.3 (6.31)	42.9 (1.69)	23.9 (0.94)	50.8 (2.00)	54.1 (2.13)	45.2 (1.78)

FS and FD Cast Hub Device Boxes

UNILETS™ for use with Threaded Rigid Conduit and IMC. All Device Boxes have Ridge Top Construction. Furnished with Internal Ground Screw.

NEC: Listed for Ordinary (Unclassified) Locations

Type FD Extra Deep — Dimensions in Millimeters (Inches)

Single Gang

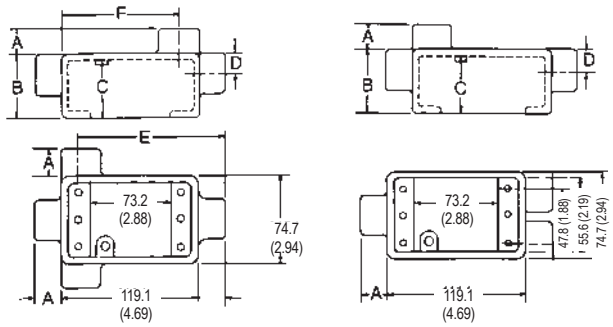

With Mounting Lugs

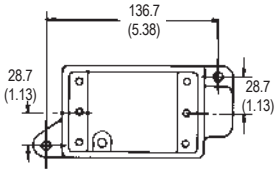

Two Gang With Mounting Lugs

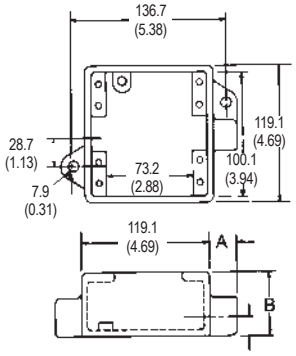

	Hub Size (Inches)	A	B	C	D	E	F
All FD Type Boxes	1/2	19.05 (0.75)	77.72 (3.06)	73.15 (2.88)	16.00 (0.63)	119.13 (4.69)	100.08 (3.94)
	3/4	19.05 (0.75)	77.72 (3.06)	73.15 (2.88)	19.05 (0.75)	115.82 (4.56)	96.77 (3.81)
	1	22.35 (0.88)	77.72 (3.06)	73.15 (2.88)	22.35 (0.88)	—	—

FS and FD Cast Hub Device Boxes

UNILETS™ for use with Threaded Rigid Conduit and IMC. All Device Boxes have Ridge Top Construction. Furnished with Internal Ground Screw.

NEC: Listed for Ordinary (Unclassified) Locations

Applications

- Accommodate wiring devices such as switches and receptacles.
- Provide excellent service in areas where boxes are subject to rough usage.
- Serve as pull boxes for conductors.
- Permit access to conductors for maintenance.
- Provide openings for making splices.
- Allow connections for branch conduit runs.
- Blank bodies for special conduit entrance arrangements.

Features

- Corrosion-resistant — ideal for indoor and outdoor installations.
- Weatherproof, raintight and dust-tight when used with cast gasketed covers.
- FS and FD boxes take standard flush wiring devices.
- FD boxes take devices exceeding 41.4 mm (1.63 in) in depth under fastening ears.
- Malleable iron for high tensile strength and ductility — provides greater resistance to impact and shock.
- Both malleable iron and aluminum boxes have ridge top construction for positive cover/gasket/box fit.
- Accurately tapped, tapered threads for tight, rigid joints, ground continuity.
- Complete selection of covers, receptacles, plugs, gaskets and accessories.
- Covers have captive stainless steel screws to speed installation, prevents loss of screws.
- Internal grounding screws standard.
- Available in single, two and three gang and tandem.
- Smooth, rounded integral bushing in each hub protects conductor insulation.

Standard Materials

- Boxes: malleable iron or copperfree (4/10 of 1% max.) aluminum
- Covers: malleable iron, steel, or copperfree (4/10 of 1% max.) aluminum
- Screws: stainless steel
- Gaskets: neoprene

Standard Finishes

- Malleable iron boxes and covers: triple-coat — (1) zinc electroplate, (2) chromate, and (3) epoxy powder coat
- Aluminum boxes and covers: epoxy powder coat
- Steel covers: zinc electroplate

Options

- For additional corrosion protection, specify Hot Dip Galvanized. Add suffix "-G" to catalog number. Contact your local representative for pricing and availability.

NEC Certifications and Compliances

- UL Standard: 514A
- UL Listed: E-18095, E2527
- Suitable for wet locations when used with gasketed covers.
- Fed Spec: A-A-50563
- NEMA Standard: FB-1



Illustrated Features



Gasket is designed so that it wraps around ridge top of O-Z/Gedney aluminum or malleable iron device box. Result is a positive seal against moisture.



Gasket construction. Cover tightens on largest perimeter of gasket and fits snugly against portion of gasket that wraps around ridge top of box.

FS and FD Cast Hub Device Boxes

UNILETS™ for use with Threaded Rigid Conduit and IMC. All Device Boxes have Ridge Top Construction. Furnished with Internal Ground Screw.

NEC: Listed for Ordinary (Unclassified) Locations

FS Box (Shallow) 2.00" deep, FD Box (Deep) 2.69" deep, ED (Extra Deep) 3.06" deep

	Type	Depth	Trade Size (Inches)	Catalog Number Malleable Iron Ridge Top	Aluminum Ridge Top
	FS	Shallow	1/2	0ZGFS150	0ZGFS150A
			3/4	0ZGFS175	0ZGFS175A
			1	0ZGFS1100	FS1100A
	FD	Deep	1/2	0ZGFD150	0ZGFD150A
			1/2	0ZGFD150ED	—
			3/4	0ZGFD175	0ZGFD175A
			3/4	0ZGFD175ED	—
			1	0ZGFD1100	—
			1	0ZGFD1100ED	—
	FSC	Shallow	1/2	0ZGFSC150	0ZGFSC150A
			3/4	0ZGFSC175	0ZGFSC175A
			1	0ZGFSC1100	—
	FDC	Deep	1/2	0ZGFDC150	0ZGFDC150A
			1/2	0ZGFDC150ED	—
			3/4	0ZGFDC175	0ZGFDC175A
			3/4	0ZGFDC175ED	—
			1	0ZGFDC1100	—
			1	0ZGFDC1100ED	—
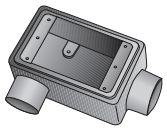	FSL	Shallow	1/2	FSL150	—
			3/4	FSL175	—
	FDL	Deep	1/2	FDL150	—
			3/4	FDL175	—
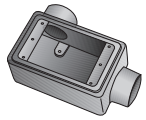	FSR	Shallow	1/2	FSR150	—
	FDR	Deep	1/2	FDR150	—
			3/4	FDR175	—
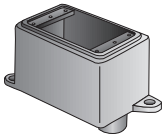	FDA	Deep	1/2	FDA150	—
			3/4	FDA175	—
	FSS	Shallow	1/2	0ZGFSS150	—
			3/4	0ZGFSS175	0ZGFSS175A

Shaded boxes include mounting feet.

FS and FD Cast Hub Device Boxes

UNILETS™ for use with Threaded Rigid Conduit and IMC. All Device Boxes have Ridge Top Construction. Furnished with Internal Ground Screw.

NEC: Listed for Ordinary (Unclassified) Locations

FS Box (Shallow) 2.00" deep, FD Box (Deep) 2.69" deep, ED (Extra Deep) 3.06" deep

	Type	Depth	Hub Size (Inches)	Catalog Number Malleable Iron Ridge Top	Aluminum Ridge Top
	FSCC	Shallow	1/2	**0ZGFSCC150**	—
			3/4	**0ZGFSCC175**	**FSCC175A**
	FDCC	Deep	1/2	**0ZGFDCC150**	—
			3/4	**0ZGFDCC175**	—
			3/4	**0ZGFDCC175ED**	—
	FSCT	Shallow	1/2	**0ZGFSCT150**	—
			3/4	**0ZGFSCT175**	—
			1	**0ZGFSCT1100**	—
	FDCT	Deep	1/2	**0ZGFDCT150**	—
			3/4	**0ZGFDCT175**	—
			3/4	**0ZGFDCT175ED**	—
			1	**0ZGFDCT1100**	—
			1	**0ZGFDCT1100ED**	—
	FSX	Shallow	1/2	**0ZGFSX150**	—
			3/4	**0ZGFSX175**	—
	FDX	Deep	1/2	**0ZGFDX150**	—
			1/2	**0ZGFDX150ED**	—
			3/4	**0ZGFDX175**	—
			3/4	**0ZGFDX175ED**	—

FS Box (Shallow) 2.00" deep, FD Box (Deep) 2.69" deep

	Type	Depth	Hub Size (Inches)	Catalog Number Malleable Iron Ridge Top	Aluminum Ridge Top
FS Two-Gang Tandem Boxes —Takes single gang covers					
	FS	Shallow	3/4	**0ZGFS2T75**	—

FS and FD Cast Hub Device Boxes

Steel Covers and Aluminum Covers for Ridge Top Boxes. Furnished with Stainless Steel Screws, Less Gasket.
UNILETS™ for use with Threaded Rigid Conduit and IMC. All Device Boxes have Ridge Top Construction. Furnished with Internal Ground Screw.

NEC: Listed for Ordinary (Unclassified) Locations

	Description	Catalog Number Steel	Malleable Iron	Aluminum
Stamped Steel, Malleable Iron and Aluminum Covers — Furnished with stainless steel screws, less gasket				
	For square handle tumbler or toggle switches.	**FS1SCS**	—	—
	For round receptacles. Mounts directly on box. Hole Dia.—1-13/32".	**FS1SRCS**	—	—
	For round receptacles. Mounts directly on box. Hole Dia.—1-5/8". 3-9/32" C to C screw holes.	**FS1LRCS**	—	—
	For standard 2 or 3 wire duplex receptacles.	**FS1DCS**	—	—
	Blank	**FS1BCS**	—	—
	Blank	—	**FS1BC**	**FS1BCA**
Cast Covers NEMA 3R Wet Locations — Furnished with gasket and stainless steel screws				
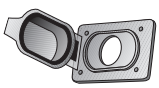	Round receptacle Hole Diameter — 1-7/16"	—	—	**FS1WRCA**
	For duplex flush receptacle with spring cover	—	—	**FS1WDCA**
	For external operation of tumbler switches with square handles	—	—	**FS1WPCA**
	Operating type for square handle tumbler or toggle switches	—	—	**FS1WSCA**
	Rocker type for square handle tumbler or toggle flush switches	—	—	**FSK1VA**
Gasket — Replacement				
	Neoprene—for use with wet location covers	—	**FS1SG**	**FS1SG**
Cast Covers Dry Locations — Furnished with stainless steel screws less gasket				
	For standard 2 or 3 wire duplex receptacles	—	**FS1DC**	**FS1DCA**
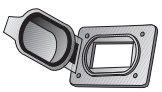	Ground fault receptacle	—	—	**FS1GFCA**

FS and FD Cast Hub Device Boxes

UNILETS™ for use with Threaded Rigid Conduit and IMC. All Device Boxes have Ridge Top Construction. Furnished with Internal Ground Screw.

NEC: Listed for Ordinary (Unclassified) Locations

FS Box (Shallow) 2.00" deep, FD Box (Deep) 2.69" deep, ED (Extra Deep) 3.06" deep

	Type	Depth	Hub Size (Inches)	Catalog Number Malleable Iron Ridge Top	Aluminum Ridge Top
	FS	Shallow	1/2	**0ZGFS250**	—
			3/4	**0ZGFS275**	**0ZGFS275A**
			1	**0ZGFS2100**	—
	FD	Deep	1/2	**0ZGFD250**	—
			1/2	**0ZGFD250ED**	—
			3/4	**0ZGFD275**	—
			3/4	**0ZGFD275ED**	—
			1	**0ZGFD2100**	—
			1	**0ZGFD2100ED**	—
	FSC	Shallow	1/2	**0ZGFSC250**	—
			3/4	**0ZGFSC275**	**FSC275A**
			1	**0ZGFSC2100**	—
	FDC	Deep	1/2	**0ZGFDC250**	—
			1/2	**0ZGFDC250ED**	—
			3/4	**0ZGFDC275**	—
			3/4	**0ZGFDC275ED**	—
			1	**0ZGFDC2100**	—
			1	**0ZGFDC2100ED**	—

Shaded boxes include mounting feet (feet not shown for boxes on this page).

FS and FD Cast Hub Device Boxes

UNILETS™ for use with Threaded Rigid Conduit and IMC. All Device Boxes have Ridge Top Construction. Furnished with Internal Ground Screw.

NEC: Listed for Ordinary (Unclassified) Locations

	Description	Catalog Number Steel	Malleable Iron	Aluminum
Stamped Steel and Aluminum Covers — With stainless steel screws, less gasket				
	For square handle tumbler or toggle flush switches	**FS2SCS**	—	—
	For duplex flush receptacles	**FS2DCS**	—	—
	For tumbler flush switch and duplex flush receptacles	**FS2SDCS**	—	—
Cast Covers — Weatherproof — With gasket and stainless steel screws				
	For external operation of tumbler switches with square handles	—	—	**FS2WSCA**
	Blank Cover	—	**FS2BCS**	**FS2BCA**
	Gasket — Replacement Neoprene — for use with 2-gang cast covers above	**FS2SG**		—

FS and FD Cast Hub Device Boxes

UNILETS™ for use with Threaded Rigid Conduit and IMC. All Device Boxes have Ridge Top Construction. Furnished with Internal Ground Screw.

NEC: Listed for Ordinary (Unclassified) Locations

Wiring Capacity

Hub Size(Inches)	Capacity — dm³ (in³) FS — Single-Gang	FD — Single-Gang	FS — Two-Gang Tandem
1/2	0.29 (18.00)	0.41 (25.00)	0.66 (40.00)
3/4	0.29 (18.00)	0.41 (25.00)	0.66 (40.00)
1	0.29 (18.00)	0.41 (25.00)	0.66 (40.00)

Dimensions in Millimeters (Inches)

FS and FD Single Gang Boxes without lugs

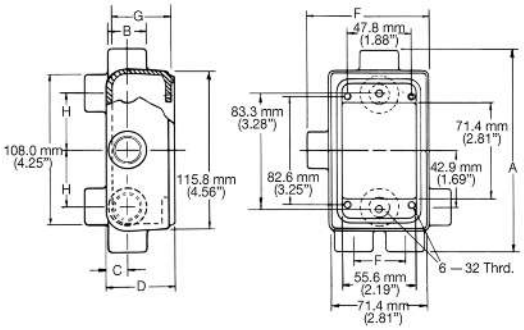

FS and FD Single Gang Boxes with lugs

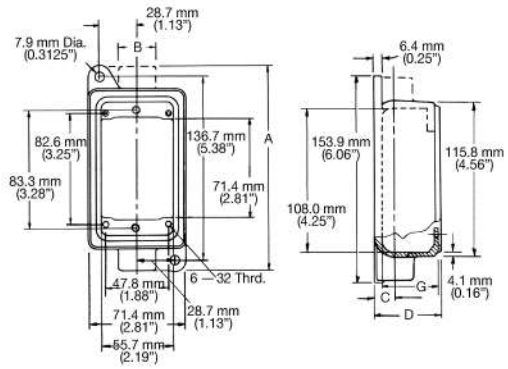

FS Tandem Boxes

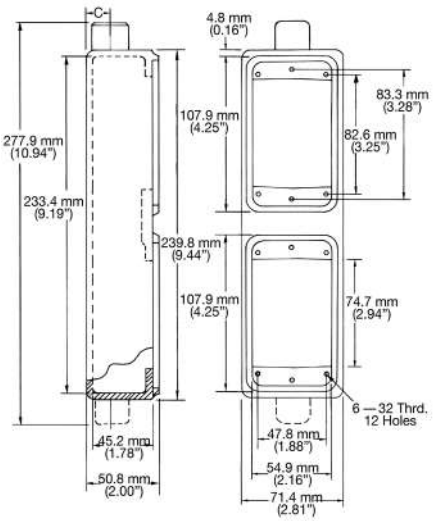

Hub Size (Inches)	A	B	C	D "FS"	D "FD"	E	F	G "FS"	G "FD"	H
1/2	149.4 (5.88)	28.7 (1.13)	16.0 (0.63)	50.8 (2.00)	68.3 (2.69)	38.1 (1.50)	88.9 (3.50)	45.2 (1.78)	62.0 (2.44)	42.9 (1.69)
3/4	149.4 (5.88)	35.1 (1.38)	19.1 (0.75)	50.8 (2.00)	68.3 (2.69)	52.3 (2.06)	88.9 (3.50)	45.2 (1.78)	62.0 (2.44)	38.1 (1.50)
1	160.3 (6.31)	42.9 (1.69)	23.9 (0.94)	50.8 (2.00)	68.3 (2.69)	52.3 (2.06)	88.9 (3.50)	45.2 (1.78)	62.0 (2.44)	35.1 (1.38)

FS and FD Cast Hub Device Boxes

UNILETS™ for use with Threaded Rigid Conduit and IMC. All Device Boxes have Ridge Top Construction. Furnished with Internal Ground Screw.

NEC: Listed for Ordinary (Unclassified) Locations

Type FD Extra Deep — Dimensions in Millimeters (Inches)

Single Gang

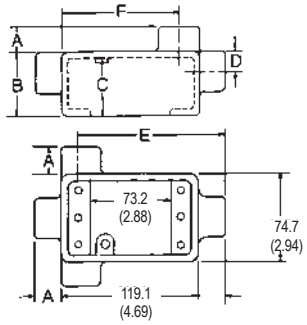

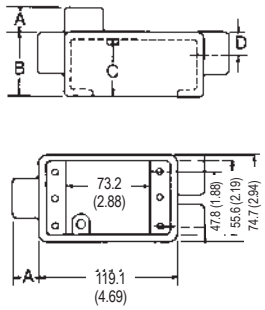

With Mounting Lugs

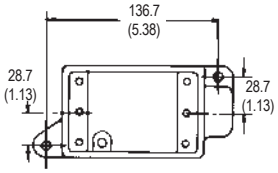

Two Gang With Mounting Lugs

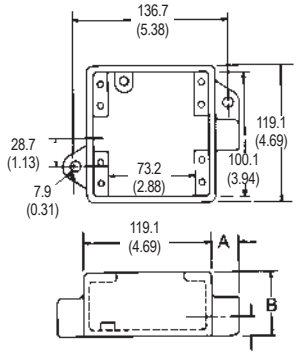

	Hub Size (Inches)	A	B	C	D	E	F
All FD Type Boxes	1/2	19.05 (0.75)	77.72 (3.06)	73.15 (2.88)	16.00 (0.63)	119.13 (4.69)	100.08 (3.94)
	3/4	19.05 (0.75)	77.72 (3.06)	73.15 (2.88)	19.05 (0.75)	115.82 (4.56)	96.77 (3.81)
	1	22.35 (0.88)	77.72 (3.06)	73.15 (2.88)	22.35 (0.88)	—	—