Appleton®

DICOM INGENIEROS S.R.L.

Materiales eléctricos
Industriales

GUÍA DE
FICHAS TÉCNICAS

PRODUCTOS ELECTRICOS



MINERIA · ENERGIA · CONSTRUCCIÓN · HIDROCARBUROS · INDUSTRIA · TELECOMUNICACIONES · INFRAESTRUCTURA Y TRANSPORTE

Escanea el QR
Visita nuestro **Catálogo**

+51 991 872 290

Siguenos en **nuestras redes**

U–Line™ Contender™ Factory Sealed 20 Amp Plugs and Receptacles

Explosionproof, Dust-Ignitionproof

NEC:
Class I, Division 1, Groups C, D
Class I, Division 2, Group B
Class I, Zone 1, Group IIB
Class I, Zone 2, Group IIB + H_2
Class II, Division 1 and 2, Groups F, G

NEC:
Class III
NEMA 3, 3R, 3RX, 4X▼, 7CD, 9FG

Applications

- Locations where receptacles are used with stationary or portable electrically operated devices such as:
  - — Lighting systems
  - — Conveyors
  - — Heaters
  - — Motor-generator sets
  - — Air conditioners
  - — Compressors
  - — Pumps
- Locations where damp or corrosive conditions exist.

Features

- Receptacle covers are UL Listed when used with Contender™ series mounting boxes, and UL Classified when used with Crouse-Hinds™ ✢ EDS series mounting boxes.
- ECP plug fits any standard non-explosionproof receptacle (NEMA 5-20R, or 6-20R) as well as U-Line™ explosionproof receptacles.
- Insulators provide superior dielectric and mechanical strength and lowest arc tracking.
- Dead front design: receptacle is not energized until plug is fully inserted and switch is engaged.

Standard Materials

- Receptacle covers: copperfree (4/10 of 1% max.) aluminum
- Mounting boxes: malleable iron
- Insulating blocks: fiberglass reinforced thermoset polyester

Standard Finishes

- Malleable iron mounting boxes: triple-coat– (1) zinc electroplate, (2) chromate and (3) epoxy powder coat
- Receptacle covers and aluminum mounting boxes: epoxy powder coat

Options

- Copperfree (4/10 of 1% max.) aluminum receptacle cover and mounting box. Add suffix –**SA**.



NEC Certifications and Compliances

- UL Listed: E10784
- UL Standard: UL 1203, UL 1010, UL 894

Related Products

- U-Line™ Contender™ receptacles only available for use in combination with 1- and 2-gang EDS series mounting boxes incorporating such devices as pilot lights, switches and push buttons. *See Controls Section.*

Illustrated Features

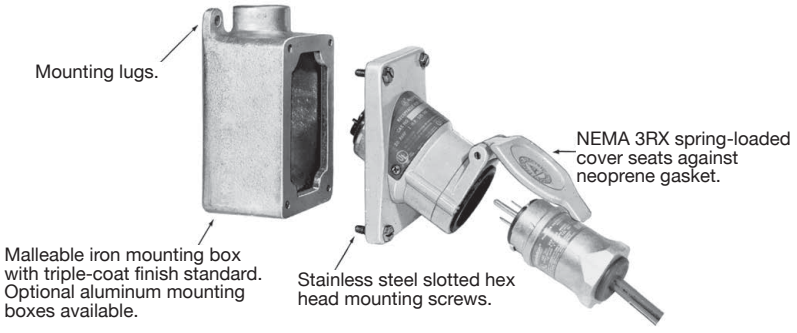

U-Line™ NEMA 4X corrosion resistance screw cover kit available: **ULINEREC4XKIT▼**.



▼ *NEMA 3RX when the spring-loaded cover is installed and closed. NEMA 4X when the screw cover is installed and fully engaged.*
Note: Covers are UL Classified to mount on Crouse-Hinds® EDS mounting boxes. Appleton "ENR" Series receptacles are UL Classified for use with Crouse-Hinds® ENP Series plugs.
✢ *Crouse-Hinds, EDS and ENP are registered trademarks of Cooper Crouse-Hinds.*

© July 2018

U–Line™ Contender™ Factory Sealed 20 Amp Plugs and Receptacles

Explosionproof, Dust-Ignitionproof

NEC:
Class I, Division 1, Groups C, D
Class I, Division 2, Group B
Class I, Zone 1, Group IIB
Class I, Zone 2, Group IIB + H_2
Class II, Division 1 and 2, Groups F, G

NEC:
Class III
NEMA 3, 3R, 3RX, 4X▾, 7CD, 9FG

Illustrated Features

Spring-loaded cover keeps dust out of receptacle when plug is not in use, which may be rotated 180° or completely removed. Stainless steel cover spring-completely enclosed for protection from corrosive environments.

Factory sealed receptacle/switch interior. Switch is an integral part of receptacle interior, contained in an aluminum sleeve. Protective xylan coating on inside of sleeve provides smooth "rotating" action of internal switch, which is activated by rotating plug in receptacle. Entire aluminum sleeve is sealed at both ends with neoprene O-rings to protect receptacle/switch interior against moisture.

ECP Interchanger plug fits ordinary location receptacles (NEMA 5-20R and NEMA 6-20R) and explosionproof U-Line™ receptacle as well competitors comparable NEMA blade configured receptacles.

A twist of the plug produces audible "click" to indicate fast make and break of built-in switch contacts. Twisting plug locks it in place—cannot be accidentally pulled out.



Special neoprene watertight plug bushing accommodates flexible cord ranging from .538" to .639" in diameter.



With plug in use, neoprene gasket in throat of receptacle "seals" around plug keeping out dirt, water, dust and other foreign matter.



With plug not in use, spring-loaded cover seats against neoprene gasket to seal receptacle from corrosive atmospheres.



For safety... Ordinary location plug will NOT activate explosionproof U-Line™ receptacle.



Plug mechanical cable clamps on the plug prevent strain on cables and meet or exceed UL 150 lb. strain relief pull-out test for classified locations.



Solderless lugs—all terminals are pressure type to facilitate wiring.

Longer plug housing for better gripping and easier plug insertion and withdrawal.

Visit our website at **www.emerson.com** or contact us at **(800) 621-1506**.
© July 2018

EMERSON

U–Line™ Contender™ Factory Sealed 20 Amp Receptacles

Explosionproof, Dust-Ignitionproof

NEC:
Class I, Division 1, Groups C, D
Class I, Division 2, Group B
Class I, Zone 1, Group IIB
Class I, Zone 2, Group IIB + H_2
Class II, Division 1 and 2, Groups F, G

NEC:
Class III
NEMA 3, 3R, 3RX, 4X▼, 7CD, 9FG

	Type	Hub Size	Catalog Numbers ① 125 Vac	250 Vac
Single Gang				
	Dead-End	1/2	**ENR11201**	**ENR11202**
		3/4	**ENR21201**	**ENR21202**
		1	**ENR31201**	**ENR31202**
	Feed-Thru	1/2	**ENRC11201**	**ENRC11202**
		3/4	**ENRC21201**	**ENRC21202**
		1	**ENRC31201**	**ENRC31202**
Two Gang				
	Dead-End	1/2	**ENR12201**	**ENR12202**
		3/4	**ENR22201**	**ENR22202**
		1	**ENR32201**	**ENR32202**
	Feed-Thru	1/2	**ENRC12201**	**ENRC12202**
		3/4	**ENRC22201**	**ENRC22202**
		1	**ENRC32201**	**ENRC32202**
Receptacle with GFI◆ Cover, Two Gang				
	Dead-End	1/2	**ENR12201GFI**	—
		3/4	**ENR22201GFI**	—
		1	**ENR32201GFI**	—
	Feed-Thru	1/2	**ENRC12201GFI**	—
		3/4	**ENRC22201GFI**	—
		1	**ENRC32201GFI**	—
Replacement Receptacle Covers and Spare Parts				
	Receptacle Cover Assembly		**ENR5201**	**ENR6202**
	Spring-loaded Cover Replacement Assembly (Aluminum)		**ULSCA**	
	GFCI Cover Assembly ②		**GFS1**	
	NEMA 4X Screw Cover Kit ▼		**ULINEREC4XKIT**	

Dead–End **Feed–Thru** **ENR5201** **GFS1◆**

① *Standard mounting box malleable iron. For aluminum mounting box, add suffix –**SA** to catalog number.*
② *GFI units rated 20 Amp, 125 VAC. Trip setting is 5 mA.*
▼ *NEMA 3RX when the spring-loaded cover is installed and closed. NEMA 4X when the screw cover is installed and fully engaged.*
◆ *GFS-1 covers and GFI receptacle combinations are not certified for use in Class I, Division 2 Group B.*

© July 2018

U–Line™ Interchanger 20 Amp Plugs

For U-Line™ Contender™ 20 Amp Receptacles. Explosionproof, Dust-Ignitionproof

These watertight ① plugs also fit NEMA 5-20R or 6-20R receptacles in nonclassified areas. Choice of Aluminum or Thermoplastic Polyester Plug.

NEC/CEC:
Class I, Division 1 and 2, Groups B, C, D
Class II, Division 1 and 2, Groups F, G
Class III
NEMA Type 4

Applications

- U-Line™ Interchanger ECP plug: suitable for use in such areas as refineries, petrochemical plants, and other areas subject to where ignitable gases are present.
- NCP Plug: ideal where moisture or corrosion is a constant problem, such as production facilities on marine platforms, and pipeline transportation facilities.

Features

- Unique blade-type, brass contacts exert constant pressure along entire contact surface and provide superior electrical contact.
- Insulators provide superior dielectric and mechanical strength and lowest arc tracking.
- Longer plug housing for better gripping and easier plug insertion and withdrawal.
- Plugs fits any standard non-explosionproof receptacle (NEMA 5-20R, or 6-20R) as well as U-Line™ explosionproof receptacles.
- ECP plug: a twist of the plug produces audible ”click” to indicate fast make and break of built-in switch contacts. Twisting plug locks it in place and cannot be accidentally pulled out.
- NCP plug: special neoprene watertight plug bushing accommodates flexible cord ranging from .538” to .639” diameter.

Standard Materials

- ECP plug: copperfree (less than 4/10ths of 1%) aluminum.
- NCP plug: 30% glass-reinforced thermoplastic polyester.

	Amp	Diagram	Wire/ Pole	Cable Dia., (Inches)	Catalog Number 125 Vac	Catalog Number 250 Vac
U-Line™ Interchanger ECP Standard Plug						
	20		2W, 3P	0.538 to 0.639	**ECP-2023**	—
	20		2W, 3P	0.538 to 0.639	—	**ECP-20232**
NCP Plug						
	20		2W, 3P	0.538 to 0.639	**NCP-2023**	—
	20		2W, 3P	0.538 to 0.639	—	**NCP-20232**

Dimensions in Millimeters (Inches)

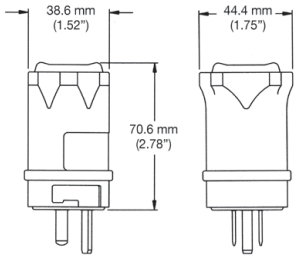

① *Watertight when unmated.*

Visit our website at **www.emerson.com** or contact us at **(800) 621-1506**.
© July 2018

EMERSON

GFS–1 Factory Sealed Ground Fault Circuit Interrupter

For U-Line™ Contender™ 20 Amp Receptacles. Explosionproof, Dust-Ignitionproof

125 Vac Branch Circuits. Installs on Standard Contender Series Mounting Boxes.

NEC:
Class I, Division 1 and 2, Groups C, D
Class II, Division 1 and 2, Groups E, F, G
Class III
NEMA 3, 3X, 3RX, 7CD, 9FG

Applications

- Provides required ground fault protection for portable electrically-operated devices. Meets all UL and CSA requirements for ground fault protection in hazardous locations.
- Well suited for use in highly corrosive atmospheres and wet locations.
- Can be used in conjunction with U-Line™ factory sealed Contender™ receptacle on 20 Amp, 125 Vac branch circuits.

Features

- GFI covers are UL Listed when used with Contender™ series mounting boxes, and UL Classified when used with Crouse-Hinds® EDS series mounting boxes.
- Factory sealed construction; no external seals are required. Arcing is confined within the device's interior sealed chamber.
- Rated 20 Amp, 125 Vac, 5 mA trip setting.
- Smooth-operating test and reset buttons.

Standard Materials

- GFI cover and sealing chamber cast copperfree (less than 4/10 of 1%) aluminum
- Cover bolts, test and reset buttons and shafts: stainless steel

Standard Finishes

- GFI cover: Epoxy powder coat

NEC Certifications and Compliances

- UL Listed: E81751
- UL Standard: UL 943, UL 1203



Description	Catalog Number
Aluminum Ground Fault Interrupter Cover/Device	**GFS1**

Dimensions in Millimeters (Inches)

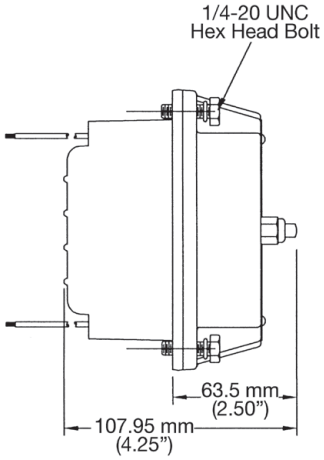

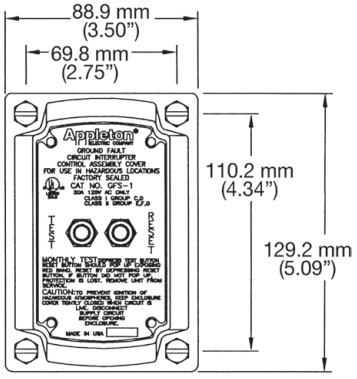

Note: Covers are UL Classified to mount on Crouse-Hinds® EDS mounting boxes. Crouse-Hinds, EDS and ENP are registered trademarks of Cooper Crouse-Hinds.

© July 2018

U–Line™ Contender™ 20 Amp Receptacle Mounting Boxes

NEC:
Class I, Division 1 and 2, Groups C, D
Class II, Division 1 and 2, Groups E, F, G
Class III

EDS Cast Device Mounting Boxes

	Type	Hub Size (Inches)	Dimensions in Millimeters (Inches) A	B	C	Catalog Number Malleable Iron	Aluminum
Single Gang							
		1/2	153.9 (6.06)	172.9 (6.81)	19.0 (0.75)	**EDS171**	**EDS171-SA**
	Dead-End	3/4	153.9 (6.06)	172.9 (6.81)	22.3 (0.88)	**EDS271**	**EDS271-SA**
		1	156.7 (6.17)	178.5 (7.03)	25.4 (1.00)	**EDS371**	**EDS371-SA**
		1/2	153.9 (6.06)	172.9 (6.81)	19.0 (0.75)	**EDSC171**	**EDSC171-SA**
	Feed-Thru	3/4	153.9 (6.06)	172.9 (6.81)	22.3 (0.88)	**EDSC271**	**EDSC271-SA**
		1	156.7 (6.17)	178.5 (7.03)	25.4 (1.00)	**EDSC371**	**EDSC371-SA**
Two Gang							
		1/2	153.9 (6.06)	172.9 6.81)	22.3 (0.88)	**EDS172**	**EDS172-SA**
	Dead-End	3/4	153.9 (6.06)	172.9 (6.81)	22.3 (0.88)	**EDS272**	**EDS272-SA**
		1	156.7 (6.17)	178.5 (7.03)	25.4 (1.00)	**EDS372**	**EDS372-SA**
		1/2	153.9 (6.06)	172.9 (6.81)	22.3 (0.88)	**EDSC172**	**EDSC172-SA**
	Feed-Thru	3/4	153.9 (6.06)	172.9 (6.81)	22.3 (0.88)	**EDSC272**	**EDSC272-SA**
		1	156.7 (6.17)	178.5 (7.03)	25.4 (1.00)	**EDSC372**	**EDSC372-SA**
Tandem ①							
		1/2	287.2 (11.31)	307.0 (12.09)	22.3 (0.88)	**EDS147**	**EDS147-SA**
	Dead-End	3/4	287.2 (11.31)	307.0 (12.09)	22.3 (0.88)	**EDS247**	**EDS247-SA**
		1	290.5 (11.44)	312.6 (12.31)	25.4 (1.00)	**EDS347**	**EDS347-SA**
		1/2	287.2 (11.31)	307.0 (12.09)	22.3 (0.88)	**EDSC147**	**EDSC147-SA**
	Feed-Thru	3/4	287.2 (11.31)	307.0 (12.09)	22.3 (0.88)	**EDSC247**	**EDSC247-SA**
		1	290.5 (11.44)	312.6 (12.31)	25.4 (1.00)	**EDSC347**	**EDSC347-SA**

Dimensions in Millimeters (Inches)

Single Gang Mounting Box with Receptacle Cover

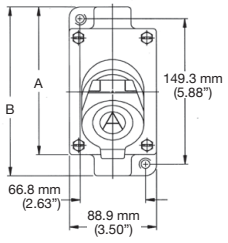

Two Gang Mounting Box with Receptacle Cover

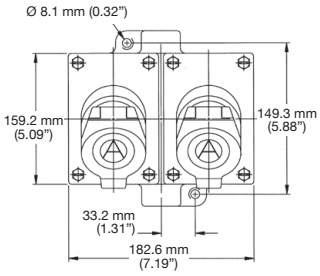

Single/Two Gang Mounting Box with Receptacle Cover Side View

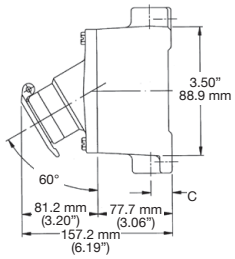

Tandem Mounting Box

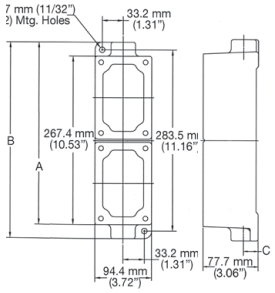

① *For tandem mounting boxes, external seals must be installed within 1.52 meters (5 feet) of each conduit entrance for Class I, Groups C and D.*

© July 2018