C-82

TYPE YS-L

HYLINK™ SPLICE STANDARD BARREL

COPPER COMPRESSION

UL Listed 90° C,
600 Volts to 35 kV ◆

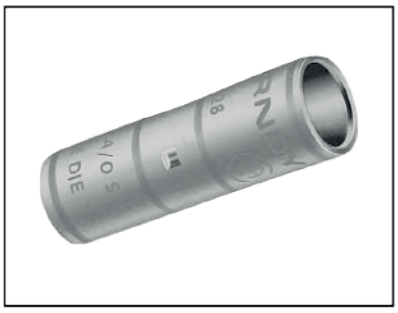

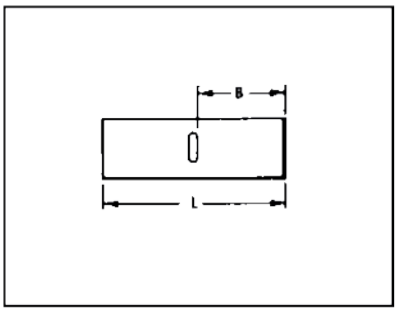

Features and Benefits

- Standard barrel length.
  - ◊ Ideal for limited space applications while providing ample barrel length for proper crimp.
- Four (4) center conductor stops.
  - ◊ Provides a center wire stop for proper conductor insertion.

Catalog Number	Conductor AWG	Conductor *** MM²	Dimensions L	Dimensions B	Installation Tooling ▲ Dieless (# of crimps)	Mechanical Y1MRTC Y2MR	Mechanical MD7-34R	Mechanical MD6 0UR840	Y35, ■ Y39, Y750, Y46* Die Number (# crimps)	Color Code	▲ Die Index & Embossment	Wire Strip Length
YS8C-L-BOX	8 str.	10	1.00	.41	Y81KFT (1) Y81KFTMBH (1) PAT81KFT-18V (1)	Y1MRTC (1)	W8CVT (1)	X8CRT (1)	U8CRT (1)	Red	49	1/2"
YS6C-L BOX	6 str.	—	1.75	.81			W5CVT (1)	X5CRT (1)	U5CRT (1)	Blue	7 or 374	7/8"
YS5C-L BOX	5 str.	16	1.90	.81								
YS4C-L BOX	4 str.	—	1.75	.81		Y1MRTC (2)	W4CVT (1)	X4CRT (1)	U4CRT (1)	Gray	8 or 346	7/8"
YS3C-L	3 str.	25	2.05	.88		Y1MRTC (2)	—	—	U3CRT (1)	White	9	15/16"
YS2C-L BOX	2 str.	—	2.00	.88		Y1MRTC (2)	W2CVT (1)	X2CRT (1)	U2CRT (1)	Brown	10	15/16"
YS1C-L BOX	1 str.	50	2.06	.88		Y1MRTC (2)	W1CVT (1)	X1CRT (1)	U1CRT-1 (1)	Green	11 or 375	15/16"
YS25-L BOX	1/0 str.	—	2.08	.88			W25VT (2)	X25RT (2)	U25RT (1)	Pink	12 or 348	15/16"
YS26-L BOX	2/0 str.	70	2.17	.94			W26VT (2)	X26RT (2)	U26RT (1)	Black	13	1"
YS27-L BOX	3/0 str.	95	2.30	1.00	Y81KFT (2) Y81KFTMBH (2) PAT81KFT-18V (2)		W27VT (2)	X27RT (2)	U27RT (1)	Orange	14	1-1/16"
YS28-L BOX	4/0 str.	—	2.32	1.00			W28VT (2)	X28RT (2)	U28RT (1)	Purple	15	1-1/16"
YS29-L BOX	250 kcmil	120	2.46	1.06			W29VT (2)		U29RT (1)	Yellow	16	1-1/8"
YS30-L	300 kcmil	150	2.47	1.06			W30VT (2)		U30RT (2)	White	17 or 298	1-1/8"
YS31-L	350 kcmil	185	2.60	1.12		—	W31VT (2)		U31RT (2)	Red	18 or 324	1-3/16"
YS32-L	400 kcmil	—	2.74	1.19			W32VT (2)		U32RT (2)	Blue	19 or 470	1-1/4"
YS34-L	500 kcmil	240	3.15	1.38			W34VT (2)	—	U34RT (2)	Brown	20 or 299	1-7/16"
YS36-L	600 kcmil	300	3.22	1.38					U36RT (2)	Green	22 or 472	1-7/16"
YS38-L	700 kcmil	—	3.22	1.38	Y81KFT (3) Y81KFTMBH (3) PAT81KFT-18V (3)		—		U38RT (2)	Pink	400	1-7/16"
YS39-L	750 kcmil	—	3.72	1.62					U39RT (2)	Black	24	1-11/16"
YS44-L	1000 kcmil	500	4.28	1.88					P44RT** (2)	White	27	1-15/16"

▲ See tooling section of this catalog for complete tool and die listings.
* Use PUADP-1 adapter with U dies in Y46 HYPRESS™.
** P44RT for use with Y46 HYPRESS™ only. PUADP-1 adaptor not required.
*** The MM² conductor sizes listed are the recommendations for Class 2 conductor.
■ The maximum size for the Y35 is 400 kcmil insulated code cable.
◆ For applications greater than 2000 Volts consult cable manufacturer for voltage stress relief instuctions.
Note: All dimensions shown are for reference only.

Blue highlighted items are industry standard and most frequently ordered.

+51 991 872 290

Siguenos en nuestras redes

Escanea el QR
Visita nuestro Catálogo