Appleton®

DICOM INGENIEROS S.R.L.

Materiales eléctricos
Industriales

GUÍA DE
FICHAS TÉCNICAS

PRODUCTOS ELECTRICOS



MINERIA · ENERGIA · CONSTRUCCIÓN · HIDROCARBUROS · INDUSTRIA · TELECOMUNICACIONES · INFRAESTRUCTURA Y TRANSPORTE

Escanea el QR
Visita nuestro **Catálogo**

Siguenos en **nuestras redes**

+51 991 872 290

Industrial Mercmaster™ LED Generation 3 Series Luminaires

Standard or with Emergency Battery Backup

Ordinary Locations

NEC/CEC/NOM Standard Model: Type 3R, 4, 4X | IP66/IP67 | IK08 | Suitable for Use in Wet Locations | Marine Outside Type (Salt Water)
NEC/CEC Emergency Battery Backup Model: Type 3R, 4, 4X | IP66/IP67 | IK08 | Suitable for Use in Wet Locations
IECEE CB Standard Model: IP66 | IK08
Notable: American Bureau of Shipping (ABS) Certified | International Dark Sky (IDA) Approved

Applications

- Powerful, efficient weatherproof lighting suitable for use in:
  - — Warehouses, storage facilities, and receiving areas
  - — Machine shops
  - — Manufacturing plants
  - — Walkways and catwalks
  - — Locations requiring IP66/IP67, Type 4X, marine and wet location luminaires
  - — Locations requiring dependable, consistent lighting in extreme hot/cold temperature environments
- Typical harsh industrial environments include:
  - — Power generation plants
  - — Foundries
  - — Waste and sewage treatment plants
  - — Steel and other metal processing facilities
  - — Pulp and paper mills
  - — Processing plants
  - — Hydrogen and Biofuels plants
  - — LNG (Liquid Natural Gas) plants
  - — Other areas where dust, water, dirt and rough usage are a problem

Features

- All Models:
  - — Modular design provides thousands of combinations for maximum versatility.
  - — Choice of optics for optimal light distribution in a variety of applications: Type I, Type III, Type V or Type V Wide.
  - — Choice of color temperature (CCT): 5000K cool white (70 CRI min), 4500K mid-neutral (80 CRI min), 4000K neutral white (80 CRI min), 3500K mid-warm (80 CRI min), or 3000K warm white (80 CRI min).
  - — Seven standard mounting hood designs allow for mounting in any location. Uses same mounting hoods as Mercmaster™ III HID.
  - — Retrofit adapters for Crouse-Hinds™ ✢, Mercmaster™ II HID, and Killark ✧ hoods available. *See Mounting Hood Adapters table*.
  - — Watertight Pendant Hood with IP 68 cord grip available to address water ingress into luminaire via conduit.
  - — Hinge has high lip for added safety during installation and servicing. Hinge and bolt construction assures 360° compression at all points on fixture housing gasket for positive sealing. Swing away design of captive bolt and nut simplifies installation.
  - — Rugged housing with superior thermal design translates to long luminaire life.
  - — Luminaire housing has wiring compartment with terminal block separate for easy wiring access.
  - — Spring-loaded screw-type terminal block can accept 0.14 - 6 mm^2 (26 - 10 AWG) wire.
  - — Heavy duty, high temperature silicone gaskets.
  - — Photometric data and electronic drawings available upon request.
  - — Standard NPT threads with M20 option.
  - — Reported L70 is >76,000 hours.
  - — 5 year standard warranty. 10 year limited warranty for select part number configurations.
- Standard Model:
  - — Design is suited for low mounting heights, from 2 m up to 9 m (7 ft up to 30 ft).
  - — Options for High Ambient luminaires (up to 75 ˚C [167 ˚F]).
  - — Customize to the application requirements with four different globe options: clear and diffused polycarbonate, clear glass, or prismatic glass refractor.



IMLGL



IMLGH

  - — Standard 6 kV/3 kA surge protection. Optional 10 kV/5 kA available.
  - — Field replaceable globes and LED driver.
  - — Nine light outputs provide up to 24,000 lumens.

Standard Mode Nominal Lumens ①	HID Equivalent	Model
3500	70-100W	IMLGL3
5500	100-150W	IMLGL5
7500	175-250W	IMLGL7
9500	250-350W	IMLGL9/IMLGH9
11,500	350-400W	IMLGH1
14,500	400W	IMLGH3
17,500	400-600W	IMLGH6
20,000	600-750W	IMLGX1
24,000	1000W	IMLGX5

- Emergency Battery Backup Model:
  - — Provides up to 1450 lumens of illumination for 90 minutes of emergency lighting with clear lens or 800 lumens of illumination for 180 minutes of emergency lighting.

Standard Mode Nominal Lumens ①	HID Equivalent	Emergency Mode Nominal Lumens ①	Model
3500	70-100W	1450	IMLGL3*H
		800	IMLGL3*E
5500	100-150W	1450	IMLGL5*H
		800	IMLGL5*E

  - — Functional diagnostic test self-initiates every 14 days after initial start up.
  - — Duration test is automatically performed once per year.
  - — Green and Red LED lights indicate charging status and provide fault warning.
  - — Simple quick disconnect connector disconnects power between LEDs and battery management module to allow for easy maintenance.
  - — Suitable for mounting heights up to 4.27 meters (14 feet).
  - — Customize to the application requirements with three different globe options: clear polycarbonate, diffused polycarbonate, and clear glass.
  - — Standard 6 kV/3 kA surge protection.
  - — Ambient Temperature: -20 ˚C to +55 ˚C (-4 ˚F to +131 ˚F).
  - — Field replaceable globes, battery management module (BMM), battery pack and LED driver.

Options

- All Models:
  - — Globe guard available, *purchase separately.*
  - — Safety cable available, *purchase separately.*
  - — Drain is available to divert water existing in the conduit system, *purchase separately*.

① *Nominal lumen value for 5000K, clear glass globe Type V Wide. Detailed lumen information is provided in the " Lumen Output (Efficacy)" tables.*
✧ *Killark is a registered trademark of Killark Manufacturing Company.*
✢ *Crouse-Hinds is a registered trademark of Cooper Industries, Inc.*

Industrial Mercmaster™ LED Generation 3 Series Luminaires

Standard or with Emergency Battery Backup

Ordinary Locations

NEC/CEC/NOM Standard Model: Type 3R, 4, 4X | IP66/IP67 | IK08 | Suitable for Use in Wet Locations | Marine Outside Type (Salt Water)
NEC/CEC Emergency Battery Backup Model: Type 3R, 4, 4X | IP66/IP67 | IK08 | Suitable for Use in Wet Locations
IECEE CB Standard Model: IP66 | IK08
Notable: American Bureau of Shipping (ABS) Certified | International Dark Sky (IDA) Approved

- Standard Model:
  - — Refractor guard available, *purchase separately.*
  - — All Mercmaster™ luminaires have provision for fusing; add suffix **–F** at the end of the catalog number. See *Ambient Temperature* table for specifics.
  - — High Ambient luminaires. Add **-A** at end of eligible part numbers.
  - — Photocontrols are available and are configured to your operating voltage. Add suffix **-1** for 120V, **-2** for 208V, **-3** for 240V, **-4** for 277V.

Standard Materials

- Mounting hoods and driver housing: cast copperfree (4/10 of 1% max.) aluminum
- Gaskets: silicone rubber
- All hardware and catch assemblies: stainless steel
- Globe: polycarbonate or glass
- Refractor: heat-resistant prismatic glass
- Globe guard, short refractor guard and safety cable: stainless steel wire
- Reflector: fiberglass reinforced white polyester

Standard Finishes

- Mounting hoods, driver housing and glass refractor guard: gray epoxy powder coat finish, electrostatically applied for complete uniform protection

NEC/CEC Certifications and Compliances

- Standard Model:
  - — UL Standard: UL 1598; UL 50E; UL1598A; UL 8750
  - — CSA Standard: C22.2 No. 250.0; C22.2 No. 250.13; C22.2 No. 94.2; C22.2 No. 0; C22.2 No. 60529
  - — NEMA ANSI/IEC Standards: 60529
  - — cCSAus: 164460, Certificate Number: 70129364
- Emergency Battery Backup Model:
  - — UL Standard: UL 1598; UL 924; UL 8750
  - — CSA Standard: C22.2 No. 250.0-18; C22.2 No. 250.13-20; C22.2 No. 141-15
  - — cCSAus: 164460, Certificate Number: 70172440

NOM: Norma Oficial Mexicana:

- Standard Model:
  - — NOM-003-SCFI-2014 (NMX-J-307-ANCE-2017)
  - — NOM Certificate: ULM-NOM-09900

IECEE CB Certificates and Compliances:

- Standard Model:
  - — IEC 60598-1, IEC 60598-2-1
  - — IECEE CB Certificates: 64460-80075816

ABS Certifications

- Standard Model: 18-HS1714308-PDA
- Emergency Battery Backup Model: 22-2207901-PDA

International Dark-Sky Association

- Standard Model:
  - — IDA Dark-Sky Approved when ordering [I]MLG[A/B/C/D/R/W] xxW[P/D/G]5Bxxx with MMVISOR accessory

Design Lights™ Consortium

- All Models:
  - — Check DLC QPL for current list of products.

Related Products

- Mercmaster LED Generation 3 Series Luminaires
- Mercmaster LED Low Profile Luminaires
- Industrial Mercmaster LED Low Profile Series Luminaires

Illustrated Features — All Models



Type I - Long and narrow distribution pattern designed with walkways in mind.



Type III - Wall mounted distribution pattern designed where you need good forward light projection.

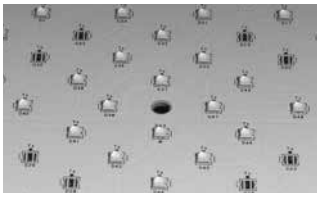

Type V - Symmetrical circle distribution pattern ideal when you need even coverage in all directions.

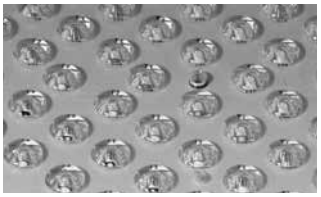

Type V Wide - Like the Type V distribution pattern with more vertical lumens designed to help spread the light quicker and more outwards.

Choose from **three color temperatures** (CCT): 3000K, 4000K, and 5000K ‡

Four light distribution patterns: Type I, Type III, Type V and Type V Wide for application flexibility.

Seven mounting hoods allow one fixture to be configured for ceiling, pendant, stanchion, or wall applications.

Standard Model — **Four globes**: clear and diffused polycarbonate, clear glass globe, and prismatic refractor provide just the right level of diffusion.

Emergency Battery Backup Model — **Three globes**: clear and diffused polycarbonate and clear glass globe provide just the right level of diffusion.

‡ Other CCT options available upon request. Contact your local sales representative for more information.

Industrial Mercmaster™ LED Generation 3 Series Luminaires

Standard or with Emergency Battery Backup

Ordinary Locations

NEC/CEC/NOM Standard Model: Type 3R, 4, 4X | IP66/IP67 | IK08 | Suitable for Use in Wet Locations | Marine Outside Type (Salt Water)
NEC/CEC Emergency Battery Backup Model: Type 3R, 4, 4X | IP66/IP67 | IK08 | Suitable for Use in Wet Locations
IECEE CB Standard Model: IP66 | IK08
Notable: American Bureau of Shipping (ABS) Certified | International Dark Sky (IDA) Approved

Illustrated Features — All Models

Safety Features





Latch Assembly and Hinge: Captive, stainless steel latch assembly (bolt and nut) closes securely while providing resistance to corrosive atmospheres. Swing-away design simplifies wiring and installation. Extra high hinge provides additional protection against accidental driver housing disengagement during installation or maintenance.

Type I and Type III Hinge System

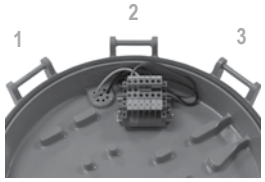



Type I and Type III light distribution patterns use a multiple hinged housing design which allows you to correctly line up the beam pattern in your desired direction. By using one of the three available hinges you can position the fixture for optimal light output.

Designed for the Environment



Driver housing design incorporates separate sections for the terminal block and driver. The efficient thermal design ensures reliable heat transfer from the LED assembly out via the heatsink and the cast, epoxy powder coat, aluminum housing.

Safety Cable

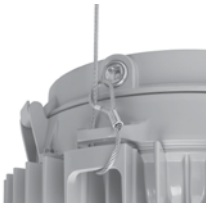

Safety cable is slipped around the housing through retention points that are casted in. Safety cable has built in loops combined with a locking carabiner to allow for a quick and secure installation.

Watertight Pendant Hood



Watertight pendant hood provides protection against water ingress in the conduit utilizing an IP68 cord grip with 3 wire holes 4 mm (0.157") in diameter.

Illustrated Features — Emergency Battery Backup Model

Quick Disconnect

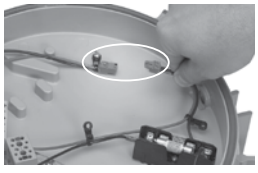

Simple quick disconnect connector disconnects power between LEDs and battery management module to allow for easy maintenance.

Field Changeable Duration Setting



Easy field changeable duration setting between 90 and 180 minutes.

Industrial Mercmaster™ LED Generation 3 Series Luminaires

Standard

Ordinary Locations

NEC/CEC/NOM Standard Model: Type 3R, 4, 4X | IP66/IP67 | IK08 | Suitable for Use in Wet Locations | Marine Outside Type (Salt Water)
IECEE CB Standard Model: IP66 | IK08
Notable: American Bureau of Shipping (ABS) Certified | International Dark Sky (IDA) Approved

Family Tree — Industrial Mercmaster™ LED Generation 3 Series Luminaires — Standard Model

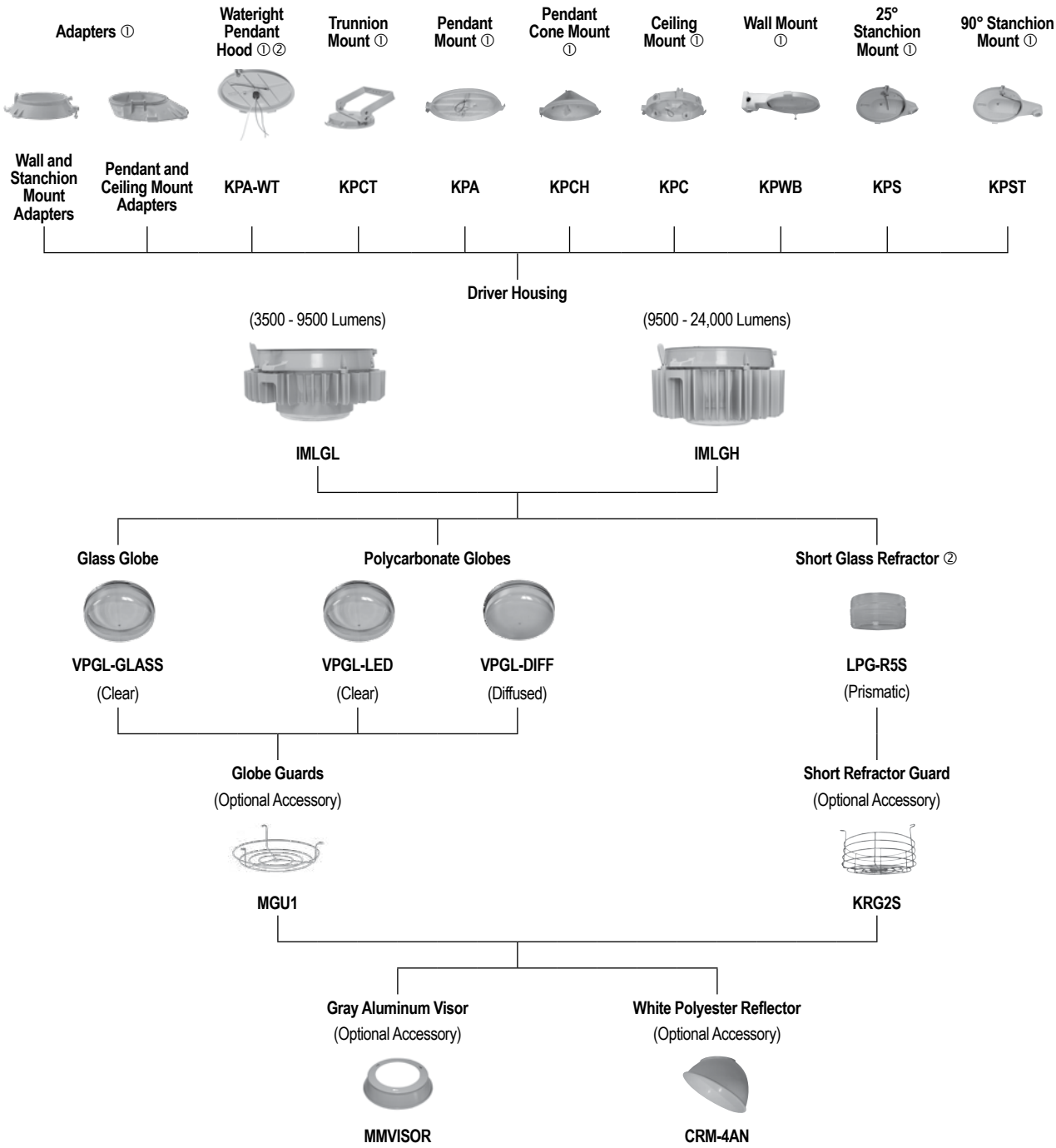

① *See Mounting Hood Adapters table for part numbers.*
② *Certified for cCSAus only.*

Industrial Mercmaster™ LED Generation 3 Series Luminaires

With Emergency Battery Backup

Ordinary Locations

NEC/CEC Emergency Battery Backup Model: Type 3R, 4, 4X | IP66/IP67 | IK08 | Suitable for Use in Wet Locations
Notable: American Bureau of Shipping (ABS) Certified | International Dark Sky (IDA) Approved

Family Tree — Industrial Mercmaster™ LED Generation 3 Series Luminaires — Emergency Battery Backup Model

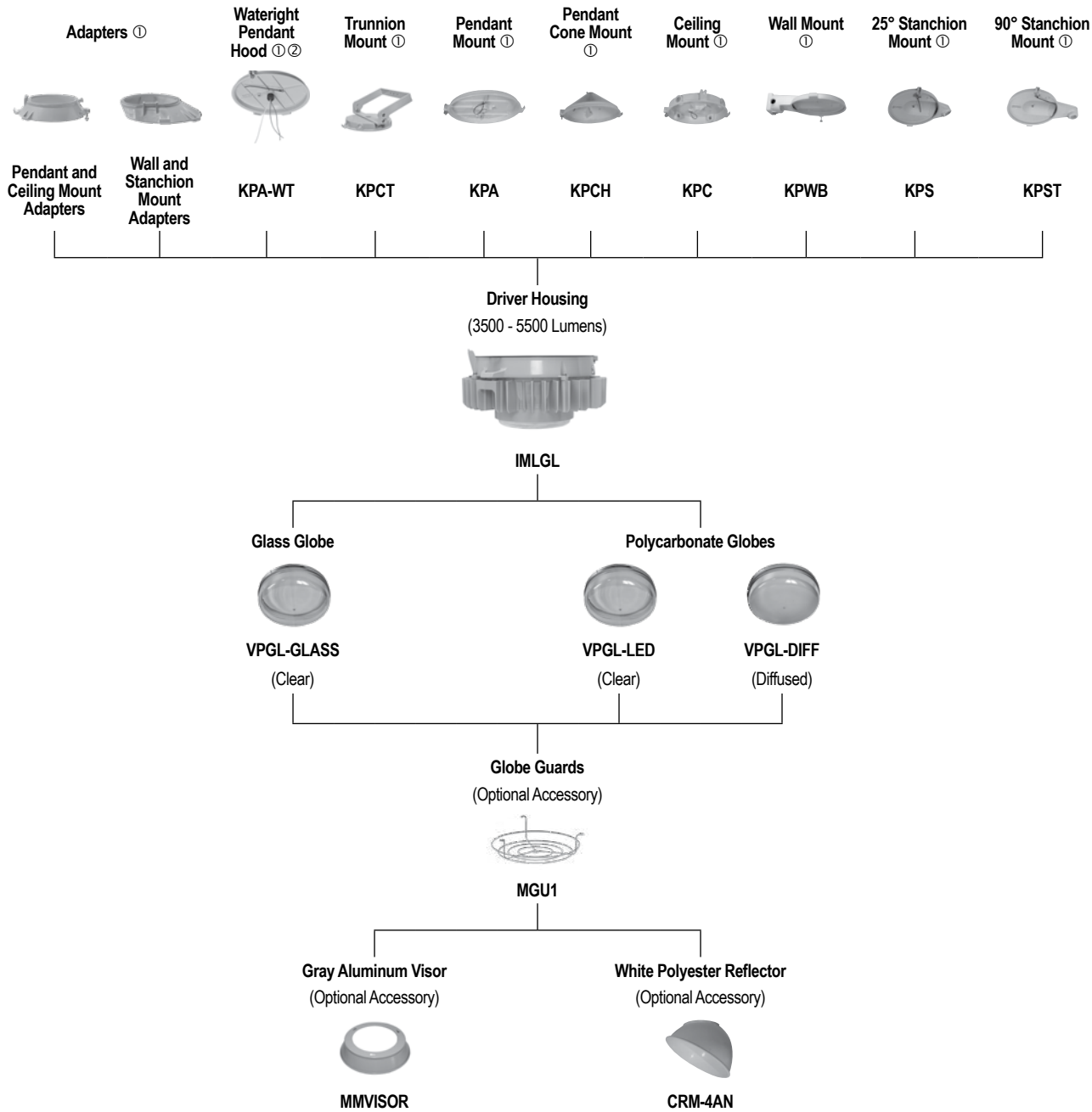

① *See Mounting Hood Adapters table for part numbers.*
② *Certified for cCSAus only.*

Industrial Mercmaster™ LED Generation 3 Series Luminaires

Standard

Ordinary Locations

NEC/CEC/NOM Standard Model: Type 3R, 4, 4X | IP66/IP67 | IK08 | Suitable for Use in Wet Locations | Marine Outside Type (Salt Water)
IECEE CB Standard Model: IP66 | IK08
Notable: American Bureau of Shipping (ABS) Certified | International Dark Sky (IDA) Approved

Order Using Catalog Numbering Guide — Industrial Mercmaster™ LED Generation 3 Series Luminaires — Standard Model

IMLG | **A** | **L3** | **2** | **C** | **P** | **5** | **BU** | **F** | **1**

Series Prefix:
IMLG - Industrial Mercmaster LED Generation 3 Series

Mounting:
A - Pendant
B - Watertight Pendant ⅄
C - Ceiling ⑥
D - Pendant Cone ⅄ ⑥
R - 90° Stanchion ①
S - 25° Stanchion ①
T - Trunnion
K - Killark™ ✧ Adapter Universal ⅄
U - Mercmaster II Adapter, Ceiling or Pendant ⅄
V - Mercmaster II Adapter, Stanchion or Wall ⅄
W - Wall
X - Crouse Hinds™ ✣ Adapter, Ceiling or Pendant ⅄ ⑦
Y - Crouse Hinds™ ✣ Adapter, Stanchion or Wall ⅄
Blank - No mounting hood

Lumen (nominal): ② ★
L3 - 3,500
L5 - 5,500
L7 - 7,500
L9 - 9,500
H9 - 9,500 ♦
H1 - 11,500
H3 - 13,500
H6 - 17,500
X1 - 20,000
X5 - 24,000

Hub Size: ⑨
2 - 3/4" NPT
3 - 1" NPT
4 - 1-1/4" NPT stanchion
5 - 1-1/2" NPT stanchion
6 - Metric M20
Blank - No hub if using adapter or ordering driver housing only (no mounting hood)

Color Temperature: ‡
C - Cool, 5000K
N - Neutral, 4000K
W - Warm, 3000K

Globe Material:
P - Clear Polycarbonate Globe
D - Diffused Polycarbonate Globe
G - Clear Glass Globe ③
J - Glass Prismatic Refractor ③ ⑩

Light Distribution Pattern:
1 - Type I ⑧
3 - Type III ⑧
5 - Type V
W - Type V Wide

Voltage:
BU - 120-277 Vac, 50/60 Hz; 125-300 Vdc
BH - 347-480 Vac, 50/60 Hz ⅄

Options: ④
F - Fusing
Blank - No fusing

Options:
1 - Photocontrol 120V ⑤
2 - Photocontrol 208V ⑤
3 - Photocontrol 240V ⑤
4 - Photocontrol 277V ⑤
S - Additional surge to 10 kV †
A- High Ambient ★
Blank - No Options Chosen

① 3/4" NPT, 1" NPT and Metric M20 hub entries are not offered in this mounting option.
② For lumen output information, see Lumen Output (Efficacy) Table.
③ Guards for the glass refractors and globes are ordered separately. See the Accessories for more information.
④ Fusing only permitted for cCSAus rating. Factory installed. Use of fuse voids Marine Outside Type (Salt Water) rating. Fusing is mounted in the driver housing. For retrofit applications, fusing must be removed from the mounting hood and ordered in the luminaire.
⑤ Luminaires with photocontrol are not rated IECEE, IP66/67, 3R, 4, 4X, or Marine Outside Type (Salt Water). Photocontrol available for 120-277 Vac only. Factory installed in the mounting hood.
⑥ Ceiling-mount and pendant cone mounting hoods and adapters are not designed to use the in hood photocontrol. Ceiling and pendant cone mounts must use an FS/FD box with photocontrol. Contact your local sales rep for more information.
⑦ Only allowed for Type V and Type V Wide light distribution.
⑧ Type I and Type III use a multiple hinge housing.
⑨ Hub size does not apply to luminaires ordered with adapters.
⑩ Short glass prismatic refractor (J) is only available in light distribution pattern Type V.
★ For NEC/CEC, high ambient is available with lumen packages L3 to H3. For IECEE, high ambient is available with lumen packages L7, H9 and H1. See details in Temperature Code tables for specific NEC/CEC or IECEE applications.
♦ H9 only available with High Ambient option (-A). See details in Temperature code tables for specific NEC/CEC applications.
† 10 year warranty standard when ordered with light distribution pattern Type I, III or V Wide or additional (10 kV) surge protection (not available with high ambient options).
‡ Other CCT options available upon request. Contact your local sales representative for more information.
⅄ Adapters, watertight pendant hood and BH Voltage only certified for cCSAus. Not available for use with photocontrol.
✧ Killark is a registered trademark of Hubbell Incorporated.
✣ Crouse-Hinds is a registered trademarks of Cooper Crouse-Hinds.

Industrial Mercmaster™ LED Generation 3 Series Luminaires

With Emergency Battery Backup

Ordinary Locations

NEC/CEC Emergency Battery Backup Model: Type 3R, 4, 4X | IP66/IP67 | IK08 | Suitable for Use in Wet Locations
Notable: American Bureau of Shipping (ABS) Certified | International Dark Sky (IDA) Approved

Order Using Catalog Numbering Guide — Industrial Mercmaster™ LED Generation 3 Series Luminaires — Emergency Battery Backup Model

IMLG	A	L3	2	C	P	5	BU	H

IMLG — Series Prefix:
IMLG - Industrial Mercmaster LED Generation 3 Series with Emergency Battery Backup

A — Mounting:
A - Pendant
B - Watertight Pendant ⅄
C - Ceiling
D - Pendant Cone ⅄
R - 90° Stanchion ①
S - 25° Stanchion ①
T - Trunnion
K - Killark™ ✧ Adapter Universal ⅄
U - Mercmaster II Adapter, Ceiling or Pendant ⅄
V - Mercmaster II Adapter, Stanchion or Wall ⅄
W - Wall
X - Crouse Hinds™ ✢ Adapter, Ceiling or Pendant ⅄ ④
Y - Crouse Hinds™ ✢ Adapter, Stanchion or Wall ⅄
Blank - No mounting hood

L3 — Lumen (nominal): ②
L3 - 3,500
L5 - 5,500

2 — Hub Size: ⑥
2 - 3/4" NPT
3 - 1" NPT
4 - 1-1/4" NPT stanchion
5 - 1-1/2" NPT stanchion
6 - Metric M20
Blank - No hub if using adapter or ordering driver housing only (no mounting hood)

C — Color Temperature:
C - Cool, 5000K
N - Neutral, 4000K
W - Warm, 3000K

P — Globe Material:
P - Clear Polycarbonate Globe
D - Diffused Polycarbonate Globe
G - Clear Glass Globe ③

5 — Light Distribution Pattern:
1 - Type I ⑤
3 - Type III ⑤
5 - Type V
W - Type V Wide

BU — Voltage:
BU - 120-277 Vac, 50/60 Hz

H — Emergency:
H - 90 Minutes
E - 180 Minutes

① 3/4" NPT, 1" NPT and Metric M20 hub entries are not offered in this mounting option.
② For lumen output information, see Lumen Output (Efficacy) Table.
③ Guards for the globes are ordered separately. See the Accessories for more information.
④ Only allowed for Type V and Type V Wide light distribution.
⑤ Type I and Type III use a multiple hinge housing.
⑥ Hub size does not apply to luminaires ordered with adapters.
⅄ Adapters only certified for cCSAus.
✧ Killark is a registered trademark of Hubbell Incorporated.
✢ Crouse-Hinds is a registered trademarks of Cooper Crouse-Hinds.

Industrial Mercmaster™ LED Generation 3 Series Luminaires

Standard

Ordinary Locations

NEC/CEC/NOM Standard Model: Type 3R, 4, 4X | IP66/IP67 | IK08 | Suitable for Use in Wet Locations | Marine Outside Type (Salt Water)
IECEE CB Standard Model: IP66 | IK08
Notable: American Bureau of Shipping (ABS) Certified | International Dark Sky (IDA) Approved

Lumen Output (Efficacy) — Standard Model ①

Model	HID Equivalency	Light Distribution Pattern	CCT (Correlated Color Temperature)	CRI (Color Rendering Index)	Lumen Output	Efficacy (lm/W)	CCT	CRI	Lumen Output	Efficacy (lm/W)	CCT	CRI	Lumen Output	Efficacy (lm/W)
Clear Polycarbonate Globe														
IMLGL3	70-100W	Type I	3000K	80	2600	87	4000K	80	2800	93	5000K	70	3200	107
		Type III	3000K	80	2800	93	4000K	80	3000	100	5000K	70	3500	117
		Type V	3000K	80	2950	98	4000K	80	3100	103	5000K	70	3300	110
		Type V Wide	3000K	80	3000	100	4000K	80	3150	105	5000K	70	3350	112
IMLGL5	100-150W	Type I	3000K	80	3800	83	4000K	80	4200	91	5000K	70	4800	104
		Type III	3000K	80	4100	89	4000K	80	4600	100	5000K	70	5200	113
		Type V	3000K	80	4400	96	4000K	80	4600	100	5000K	70	4950	108
		Type V Wide	3000K	80	4450	97	4000K	80	4700	102	5000K	70	5000	109
IMLGL7	175-250W	Type I	3000K	80	6000	105	4000K	80	6600	116	5000K	70	7500	132
		Type III	3000K	80	6300	111	4000K	80	7000	123	5000K	70	7900	139
		Type V	3000K	80	6950	114	4000K	80	7300	120	5000K	70	7650	125
		Type V Wide	3000K	80	7150	117	4000K	80	7550	124	5000K	70	7950	130
IMLGL9	250-350W	Type I	3000K	80	7800	104	4000K	80	8400	112	5000K	70	9400	125
		Type III	3000K	80	8900	112	4000K	80	8800	117	5000K	70	9800	131
		Type V	3000K	80	8300	104	4000K	80	8700	109	5000K	70	9800	123
		Type V Wide	3000K	80	8500	106	4000K	80	8950	112	5000K	70	10100	126
IMLGH9	250-350W	Type I	3000K	80	7800	104	4000K	80	8400	112	5000K	70	9400	125
		Type III	3000K	80	8100	108	4000K	80	8800	117	5000K	70	9800	131
		Type V	3000K	80	9150	116	4000K	80	9500	120	5000K	70	10800	137
		Type V Wide	3000K	80	8400	106	4000K	80	8700	110	5000K	70	9900	125
IMLGH1	350-400W	Type I	3000K	80	9500	102	4000K	80	10200	110	5000K	70	11500	124
		Type III	3000K	80	10700	109	4000K	80	10700	115	5000K	70	12000	129
		Type V	3000K	80	10900	117	4000K	80	11800	127	5000K	70	13200	142
		Type V Wide	3000K	80	9700	104	4000K	80	10500	113	5000K	70	11800	127
IMLGH3	400W	Type I	3000K	80	11400	99	4000K	80	12300	107	5000K	70	13800	120
		Type III	3000K	80	11900	103	4000K	80	12900	112	5000K	70	14500	126
		Type V	3000K	80	13100	114	4000K	80	14200	123	5000K	70	15900	138
		Type V Wide	3000K	80	11700	102	4000K	80	12700	110	5000K	70	14300	124
IMLGH6	400-600W	Type I	3000K	80	13900	96	4000K	80	15100	104	5000K	70	16900	117
		Type III	3000K	80	14900	104	4000K	80	15600	108	5000K	70	17500	121
		Type V	3000K	80	16300	113	4000K	80	17100	118	5000K	70	19100	132
		Type V Wide	3000K	80	14700	102	4000K	80	15500	107	5000K	70	17400	120
IMLGX1	600-750W	Type I	3000K	80	16431	97	4000K	80	17336	103	5000K	70	18338	109
		Type III	3000K	80	17110	101	4000K	80	18084	107	5000K	70	19096	113
		Type V	3000K	80	18623	110	4000K	80	19863	118	5000K	70	21019	124
		Type V Wide	3000K	80	17072	101	4000K	80	18044	107	5000K	70	19054	113
IMLGX5	1000W	Type I	3000K	80	18859	90	4000K	80	19932	95	5000K	70	21048	100
		Type III	3000K	80	19514	93	4000K	80	20625	98	5000K	70	21779	104
		Type V	3000K	80	22103	105	4000K	80	23575	112	5000K	70	24947	119
		Type V Wide	3000K	80	20424	97	4000K	80	21586	103	5000K	70	22794	109

① *All lumen values are typical (tolerance +/-10%).*

Industrial Mercmaster™ LED Generation 3 Series Luminaires

Standard

Ordinary Locations

NEC/CEC/NOM Standard Model: Type 3R, 4, 4X | IP66/IP67 | IK08 | Suitable for Use in Wet Locations | Marine Outside Type (Salt Water)
IECEE CB Standard Model: IP66 | IK08
Notable: American Bureau of Shipping (ABS) Certified | International Dark Sky (IDA) Approved

Lumen Output (Efficacy) — Standard Model ①

Model	HID Equivalency	Light Distribution Pattern	CCT (Correlated Color Temperature)	CRI (Color Rendering Index)	Lumen Output	Efficacy (lm/W)	CCT	CRI	Lumen Output	Efficacy (lm/W)	CCT	CRI	Lumen Output	Efficacy (lm/W)
Diffused Polycarbonate Globe														
IMLGL3	70-100W	Type I	3000K	80	2700	87	4000K	80	2900	95	5000K	70	3200	108
		Type III	3000K	80	2800	92	4000K	80	3000	101	5000K	70	3300	112
		Type V	3000K	80	2900	97	4000K	80	3200	107	5000K	70	3700	123
		Type V Wide	3000K	80	2800	91	4000K	80	3000	101	5000K	70	3400	113
IMLGL5	100-150W	Type I	3000K	80	4000	85	4000K	80	4400	94	5000K	70	4900	107
		Type III	3000K	80	4200	91	4000K	80	4600	100	5000K	70	5100	110
		Type V	3000K	80	4400	96	4000K	80	4800	104	5000K	70	5500	120
		Type V Wide	3000K	80	4200	90	4000K	80	4600	100	5000K	70	5100	110
IMLGL7	175-250W	Type I	3000K	80	6000	101	4000K	80	6600	109	5000K	70	6900	122
		Type III	3000K	80	6400	108	4000K	80	6900	114	5000K	70	7200	126
		Type V	3000K	80	6600	116	4000K	80	7300	128	5000K	70	8300	129
		Type V Wide	3000K	80	6200	105	4000K	80	6600	115	5000K	70	7200	126
IMLGL9/ IMLGH9	250-350W	Type I	3000K	80	8000	101	4000K	80	8300	106	5000K	70	9300	118
		Type III	3000K	80	8400	106	4000K	80	8800	113	5000K	70	9700	124
		Type V	3000K	80	8500	113	4000K	80	9200	123	5000K	70	10300	137
		Type V Wide	3000K	80	8200	105	4000K	80	8700	111	5000K	70	9700	124
IMLGH1	350-400W	Type I	3000K	80	9600	98	4000K	80	10000	104	5000K	70	11100	115
		Type III	3000K	80	10100	104	4000K	80	10600	110	5000K	70	11700	121
		Type V	3000K	80	10300	111	4000K	80	11200	120	5000K	70	12500	134
		Type V Wide	3000K	80	9900	102	4000K	80	10400	109	5000K	70	11700	121
IMLGH3	400W	Type I	3000K	80	10900	96	4000K	80	11600	103	5000K	70	12900	114
		Type III	3000K	80	11700	103	4000K	80	12400	109	5000K	70	13600	120
		Type V	3000K	80	12500	109	4000K	80	13500	117	5000K	70	15100	131
		Type V Wide	3000K	80	11500	101	4000K	80	12100	107	5000K	70	13700	120
IMLGH6	400-600W	Type I	3000K	80	13200	93	4000K	80	14000	99	5000K	70	15700	109
		Type III	3000K	80	14200	99	4000K	80	15000	105	5000K	70	16500	115
		Type V	3000K	80	15800	109	4000K	80	17000	118	5000K	70	18200	126
		Type V Wide	3000K	80	14000	97	4000K	80	14800	104	5000K	70	16600	116
IMLGX1	600-750W	Type I	3000K	80	15587	92	4000K	80	16491	98	5000K	70	17377	103
		Type III	3000K	80	16221	96	4000K	80	17161	102	5000K	70	18083	107
		Type V	3000K	80	18036	107	4000K	80	19260	114	5000K	70	20063	119
		Type V Wide	3000K	80	16153	96	4000K	80	17089	101	5000K	70	18007	107
IMLGX5	1000W	Type I	3000K	80	17885	85	4000K	80	18922	90	5000K	70	19939	95
		Type III	3000K	80	18499	88	4000K	80	19571	93	5000K	70	20623	98
		Type V	3000K	80	21475	102	4000K	80	22932	109	5000K	70	23888	114
		Type V Wide	3000K	80	19275	92	4000K	80	20393	97	5000K	70	21489	102

① *All lumen values are typical (tolerance +/-10%).*

Industrial Mercmaster™ LED Generation 3 Series Luminaires

Standard

Ordinary Locations

NEC/CEC/NOM Standard Model: Type 3R, 4, 4X | IP66/IP67 | IK08 | Suitable for Use in Wet Locations | Marine Outside Type (Salt Water)
IECEE CB Standard Model: IP66 | IK08
Notable: American Bureau of Shipping (ABS) Certified | International Dark Sky (IDA) Approved

Lumen Output (Efficacy) — Standard Model ①

Model	HID Equivalency	Light Distribution Pattern	CCT (Correlated Color Temperature)	CRI (Color Rendering Index)	Lumen Output	Efficacy (lm/W)	CCT	CRI	Lumen Output	Efficacy (lm/W)	CCT	CRI	Lumen Output	Efficacy (lm/W)
Clear Glass Globe														
MLGL3	70-100W	Type I	3000K	80	2800	93	4000K	80	3100	103	5000K	70	3500	117
		Type III	3000K	80	3100	102	4000K	80	3200	107	5000K	70	3700	123
		Type V	3000K	80	3100	103	4000K	80	3200	107	5000K	70	3450	115
		Type V Wide	3000K	80	3150	105	4000K	80	3250	108	5000K	70	3500	117
MLGL5	100-150W	Type I	3000K	80	4200	91	4000K	80	4600	100	5000K	70	5300	115
		Type III	3000K	80	4400	96	4000K	80	4800	104	5000K	70	5400	117
		Type V	3000K	80	4650	101	4000K	80	4800	114	5000K	70	5150	112
		Type V Wide	3000K	80	4700	102	4000K	80	4900	107	5000K	70	5250	114
MLGL7	175-250W	Type I	3000K	80	6400	112	4000K	80	7100	125	5000K	70	8000	140
		Type III	3000K	80	6600	116	4000K	80	7300	128	5000K	70	8300	146
		Type V	3000K	80	7250	119	4000K	80	7600	125	5000K	70	8000	131
		Type V Wide	3000K	80	7750	124	4000K	80	7900	130	5000K	70	8300	136
MLGL9	250-350W	Type I	3000K	80	8500	111	4000K	80	8800	117	5000K	70	9900	132
		Type III	3000K	80	8600	115	4000K	80	9300	124	5000K	70	10400	139
		Type V	3000K	80	8550	107	4000K	80	9000	113	5000K	70	10150	127
		Type V Wide	3000K	80	8850	111	4000K	80	9300	116	5000K	70	10500	131
MLGH9	250-350W	Type I	3000K	80	8100	108	4000K	80	8800	117	5000K	70	9900	132
		Type III	3000K	80	8600	115	4000K	80	9300	124	5000K	70	10400	139
		Type V	3000K	80	9300	124	4000K	80	10100	135	5000K	70	11200	149
		Type V Wide	3000K	80	8500	113	4000K	80	9200	123	5000K	70	10300	137
MLGH1	350-400W	Type I	3000K	80	9900	106	4000K	80	10700	115	5000K	70	12000	129
		Type III	3000K	80	11200	115	4000K	80	11300	122	5000K	70	12600	135
		Type V	3000K	80	11400	123	4000K	80	12300	132	5000K	70	13600	146
		Type V Wide	3000K	80	10300	111	4000K	80	11200	120	5000K	70	12500	134
MLGH3	400W	Type I	3000K	80	12000	104	4000K	80	12900	112	5000K	70	14500	126
		Type III	3000K	80	12600	110	4000K	80	13600	118	5000K	70	15300	133
		Type V	3000K	80	13700	119	4000K	80	14900	130	5000K	70	16400	143
		Type V Wide	3000K	80	12500	109	4000K	80	13500	117	5000K	70	15100	131
MLGH6	400-600W	Type I	3000K	80	14500	100	4000K	80	15700	108	5000K	70	17700	122
		Type III	3000K	80	15100	104	4000K	80	16400	113	5000K	70	18400	127
		Type V	3000K	80	17000	117	4000K	80	18000	124	5000K	70	20100	139
		Type V Wide	3000K	80	15000	103	4000K	80	16300	112	5000K	70	18200	126
MLGX1	600-750W	Type I	3000K	80	17170	102	4000K	80	18188	108	5000K	70	19206	114
		Type III	3000K	80	17931	106	4000K	80	18994	112	5000K	70	20057	119
		Type V	3000K	80	20006	118	4000K	80	21366	126	5000K	70	21937	130
		Type V Wide	3000K	80	17830	106	4000K	80	18887	112	5000K	70	19944	118
MLGX5	1000W	Type I	3000K	80	19468	93	4000K	80	20623	98	5000K	70	21777	104
		Type III	3000K	80	20342	97	4000K	80	21548	103	5000K	70	22754	108
		Type V	3000K	80	23776	113	4000K	80	25392	121	5000K	70	26070	124
		Type V Wide	3000K	80	21285	101	4000K	80	22547	107	5000K	70	23809	113

① All lumen values are typical (tolerance +/-10%).

Industrial Mercmaster™ LED Generation 3 Series Luminaires

Standard

Ordinary Locations

NEC/CEC/NOM Standard Model: Type 3R, 4, 4X | IP66/IP67 | IK08 | Suitable for Use in Wet Locations | Marine Outside Type (Salt Water)
IECEE CB Standard Model: IP66 | IK08
Notable: American Bureau of Shipping (ABS) Certified | International Dark Sky (IDA) Approved

Lumen Output (Efficacy) — Standard Model ①

Model	HID Equivalency	Light Distribution Pattern	CCT (Correlated Color Temperature)	CRI (Color Rendering Index)	Lumen Output	Efficacy (lm/W)	CCT	CRI	Lumen Output	Efficacy (lm/W)	CCT	CRI	Lumen Output	Efficacy (lm/W)
Glass Prismatic Refractor														
MLGL3	70-100W	Type V	3000K	80	2800	91	4000K	80	3000	101	5000K	70	3400	111
MLGL5	100-150W	Type V	3000K	80	4200	90	4000K	80	4600	99	5000K	70	5100	110
MLGL7	175-250W	Type V	3000K	80	6300	107	4000K	80	6700	113	5000K	70	7300	123
MLGL9/ MLGH9	250-350W	Type V	3000K	80	8400	107	4000K	80	8800	112	5000K	70	9700	124
MLGH1	350-400W	Type V	3000K	80	10100	105	4000K	80	10600	110	5000K	70	11700	121
MLGH3	400W	Type V	3000K	80	11800	104	4000K	80	12400	109	5000K	70	13600	120
MLGH6	400-600W	Type V	3000K	80	14500	100	4000K	80	15100	105	5000K	70	16700	116
MLGX1	600-750W	Type V	3000K	80	16798	99	4000K	80	17915	106	5000K	70	18318	108
MLGX5	1000W	Type V	3000K	80	19962	95	4000K	80	21290	101	5000K	70	21769	104

① *All lumen values are typical (tolerance +/-10%).*

Industrial Mercmaster™ LED Generation 3 Series Luminaires

With Emergency Battery Backup

Ordinary Locations

NEC/CEC Emergency Battery Backup Model: Type 3R, 4, 4X | IP66/IP67 | IK08 | Suitable for Use in Wet Locations
Notable: American Bureau of Shipping (ABS) Certified | International Dark Sky (IDA) Approved

Lumen Output (Efficacy) — Emergency Battery Backup Model ①

Model	HID Equivalency	Light Distribution Pattern	CCT (Correlated Color Temperature)	CRI (Color Rendering Index)	Lumen Output	Efficacy (lm/W)	CCT	CRI	Lumen Output	Efficacy (lm/W)	CCT	CRI	Lumen Output	Efficacy (lm/W)
Clear Polycarbonate Globe														
IMLGL3	70-100W	Type I	3000K	80	2600	87	4000K	80	3000	100	5000K	70	3200	107
		Type III	3000K	80	2800	93	4000K	80	3000	100	5000K	70	3500	117
		Type V	3000K	80	3000	100	4000K	80	3300	110	5000K	70	3800	127
		Type V Wide	3000K	80	2900	96	4000K	80	2900	97	5000K	70	3600	119
IMLGL3 — 90 Minute Emergency Mode	70-100W	Type I	3000K	80	1150	N/A	4000K	80	1280	N/A	5000K	70	1400	N/A
		Type III	3000K	80	1150	N/A	4000K	80	1280	N/A	5000K	70	1400	N/A
		Type V	3000K	80	1150	N/A	4000K	80	1280	N/A	5000K	70	1400	N/A
		Type V Wide	3000K	80	1150	N/A	4000K	80	1280	N/A	5000K	70	1400	N/A
IMLGL5	100-150W	Type I	3000K	80	3800	83	4000K	80	4200	91	5000K	70	4800	104
		Type III	3000K	80	4100	89	4000K	80	4600	100	5000K	70	5200	113
		Type V	3000K	80	4500	98	4000K	80	5000	109	5000K	70	5700	124
		Type V Wide	3000K	80	4400	94	4000K	80	4800	105	5000K	70	6000	129
IMLGL5 — 90 Minute Emergency Mode	100-150W	Type I	3000K	80	1150	N/A	4000K	80	1280	N/A	5000K	70	1400	N/A
		Type III	3000K	80	1150	N/A	4000K	80	1280	N/A	5000K	70	1400	N/A
		Type V	3000K	80	1150	N/A	4000K	80	1280	N/A	5000K	70	1400	N/A
		Type V Wide	3000K	80	1150	N/A	4000K	80	1280	N/A	5000K	70	1400	N/A
Diffused Polycarbonate Globe														
IMLGL3	70-100W	Type I	3000K	80	2700	87	4000K	80	2900	95	5000K	70	3200	108
		Type III	3000K	80	2800	92	4000K	80	3000	101	5000K	70	3300	112
		Type V	3000K	80	2900	97	4000K	80	3200	107	5000K	70	3700	123
		Type V Wide	3000K	80	2800	91	4000K	80	3000	101	5000K	70	3400	113
IMLGL3 — 90 Minute Emergency Mode	70-100W	Type I	3000K	80	1100	N/A	4000K	80	1230	N/A	5000K	70	1350	N/A
		Type III	3000K	80	1100	N/A	4000K	80	1230	N/A	5000K	70	1350	N/A
		Type V	3000K	80	1100	N/A	4000K	80	1230	N/A	5000K	70	1350	N/A
		Type V Wide	3000K	80	1100	N/A	4000K	80	1230	N/A	5000K	70	1350	N/A
IMLGL5	100-150W	Type I	3000K	80	4000	85	4000K	80	4400	94	5000K	70	4900	107
		Type III	3000K	80	4200	91	4000K	80	6400	100	5000K	70	5100	110
		Type V	3000K	80	4400	96	4000K	80	4800	104	5000K	70	5500	120
		Type V Wide	3000K	80	4200	90	4000K	80	4600	100	5000K	70	5100	110
IMLGL5 — 90 Minute Emergency Mode	100-150W	Type I	3000K	80	1100	N/A	4000K	80	1230	N/A	5000K	70	1350	N/A
		Type III	3000K	80	1100	N/A	4000K	80	1230	N/A	5000K	70	1350	N/A
		Type V	3000K	80	1100	N/A	4000K	80	1230	N/A	5000K	70	1350	N/A
		Type V Wide	3000K	80	1100	N/A	4000K	80	1230	N/A	5000K	70	1350	N/A

① All lumen values are typical (tolerance +/-10%). For Lumen Output (Efficacy) of the emergency battery backup model in 180 minute emergency mode, contact your local sales representative.

Industrial Mercmaster™ LED Generation 3 Series Luminaires

With Emergency Battery Backup

Ordinary Locations

NEC/CEC Emergency Battery Backup Model: Type 3R, 4, 4X | IP66/IP67 | IK08 | Suitable for Use in Wet Locations
Notable: American Bureau of Shipping (ABS) Certified | International Dark Sky (IDA) Approved

Lumen Output (Efficacy) — Emergency Battery Backup Model ①

Model	HID Equivalency	Light Distribution Pattern	CCT (Correlated Color Temperature)	CRI (Color Rendering Index)	Lumen Output	Efficacy (lm/W)	CCT	CRI	Lumen Output	Efficacy (lm/W)	CCT	CRI	Lumen Output	Efficacy (lm/W)
Clear Glass Globe														
IMLGL3	70-100W	Type I	3000K	80	2800	93	4000K	80	3100	103	5000K	70	3500	111
		Type III	3000K	80	3100	102	4000K	80	3200	107	5000K	70	3700	116
		Type V	3000K	80	3100	102	4000K	80	3600	120	5000K	70	4000	133
		Type V Wide	3000K	80	3100	101	4000K	80	3200	107	5000K	70	3600	120
IMLGL3 — 90 Minute Emergency Mode	70-100W	Type I	3000K	80	1200	N/A	4000K	80	1330	N/A	5000K	70	1450	N/A
		Type III	3000K	80	1200	N/A	4000K	80	1330	N/A	5000K	70	1450	N/A
		Type V	3000K	80	1200	N/A	4000K	80	1330	N/A	5000K	70	1450	N/A
		Type V Wide	3000K	80	1200	N/A	4000K	80	1330	N/A	5000K	70	1350	N/A
IMLGL5	100-150W	Type I	3000K	80	4200	91	4000K	80	5000	106	5000K	70	5300	115
		Type III	3000K	80	4400	95	4000K	80	5200	110	5000K	70	5400	117
		Type V	3000K	80	4800	104	4000K	80	5300	113	5000K	70	6000	130
		Type V Wide	3000K	80	4900	99	4000K	80	5200	110	5000K	70	5400	117
IMLGL5 — 90 Minute Emergency Mode	100-150W	Type I	3000K	80	1200	N/A	4000K	80	1330	N/A	5000K	70	1450	N/A
		Type III	3000K	80	1200	N/A	4000K	80	1330	N/A	5000K	70	1450	N/A
		Type V	3000K	80	1200	N/A	4000K	80	1330	N/A	5000K	70	1450	N/A
		Type V Wide	3000K	80	1200	N/A	4000K	80	1330	N/A	5000K	70	1350	N/A

① All lumen values are typical (tolerance +/-10%). For Lumen Output (Efficacy) of the emergency battery backup model in 180 minute emergency mode, contact your local sales representative.

Industrial Mercmaster™ LED Generation 3 Series Luminaires

Standard

Ordinary Locations

NEC/CEC/NOM Standard Model: Type 3R, 4, 4X | IP66/IP67 | IK08 | Suitable for Use in Wet Locations | Marine Outside Type (Salt Water)
IECEE CB Standard Model: IP66 | IK08
Notable: American Bureau of Shipping (ABS) Certified | International Dark Sky (IDA) Approved

Electrical Specifications — Standard Model ①

Model	Voltage	Input Power	Input Current (Amp)	Power Factor	Total Harmonic Distortion (THD)
IMLGL3	120 Vac	30	0.26	>0.9	< 20%
	277 Vac	30	0.12		
	170 Vdc	30	0.18	N/A	N/A
	300 Vdc	31	0.10		
	347 Vac	33	0.10	>0.9	< 20%
	480 Vac	33	0.07		
IMLGL5	120 Vac	46	0.39	>0.9	< 20%
	277 Vac	46	0.17		
	170 Vdc	46	0.27	N/A	N/A
	300 Vdc	46	0.16		
	347 Vac	49	0.14	>0.9	< 20%
	480 Vac	49	0.11		
IMLGL7	120 Vac	57	0.48	>0.9	< 20%
	277 Vac	57	0.23		
	170 Vdc	57	0.34	N/A	N/A
	300 Vdc	57	0.19		
	347 Vac	60	0.18	>0.9	< 20%
	480 Vac	60	0.14		
IMLGL9/IMLGH9	120 Vac	75	0.64	>0.9	< 20%
	277 Vac	75	0.29		
	170 Vdc	75	0.45	N/A	N/A
	300 Vdc	75	0.25		
	347 Vac	79	0.23	>0.9	< 20%
	480 Vac	79	0.17		
IMLGH1	120 Vac	93	0.79	>0.9	< 20%
	277 Vac	93	0.35		
	170 Vdc	93	0.55	N/A	N/A
	300 Vdc	93	0.31		
	347 Vac	97	0.28	>0.9	< 20%
	480 Vac	97	0.21		
IMLGH3	120 Vac	115	0.99	>0.9	< 20%
	277 Vac	115	0.44		
	170 Vdc	115	0.68	N/A	N/A
	300 Vdc	115	0.38		
	347 Vac	118	0.34	>0.9	< 20%
	480 Vac	118	0.25		
IMLGH6	120 Vac	145	1.24	>0.9	< 20%
	277 Vac	145	0.54		
	170 Vdc	145	0.86	N/A	N/A
	300 Vdc	145	0.48		
	347 Vac	145	0.42	>0.9	< 20%
	480 Vac	145	0.31		
IMLGX1	120 Vac	169	1.43	>0.9	< 20%
	277 Vac	165	0.63		
	170 Vdc	169	1.30	N/A	N/A
	300 Vdc	166	0.64		
	347 Vac	171	0.50	>0.9	< 20%
	480 Vac	170	0.37		
IMLGX5	120 Vac	210	1.79	>0.9	< 20%
	277 Vac	204	0.82		
	170 Vdc	209	1.60	N/A	N/A
	300 Vdc	203	0.76		
	347 Vac	209	0.61	>0.9	< 20%
	480 Vac	209	0.45		

① All values are typical (tolerance +/-10%).

Industrial Mercmaster™ LED Generation 3 Series Luminaires

With Emergency Battery Backup

Ordinary Locations

NEC/CEC Emergency Battery Backup Model: Type 3R, 4, 4X | IP66/IP67 | IK08 | Suitable for Use in Wet Locations
Notable: American Bureau of Shipping (ABS) Certified | International Dark Sky (IDA) Approved

Electrical Specifications — Emergency Battery Backup Model ①

Model	Voltage	Input Power (Watts)	Input Current (Amp)	Power Factor (PF)	Total Harmonic Distortion (THD)
IMLGL3	120 Vac	30	0.26	>0.9	< 20%
	277 Vac	30	0.12		
IMLGL5	120 Vac	46	0.39	>0.9	< 20%
	277 Vac	46	0.17		

Automatic Testing System (ATS) — Emergency Battery Backup Model — Functionality

Functional	Full Duration
Starts within 24 to 45 hours after the initial powerup of the module	Starts within 5 to 26 days after the initial power of the module
Occurs every 14 days after the initial aforementioned functional test	Occurs every 364 days after the initial aforementioned functional test
Lasts for 30 seconds	Lasts for the full duration of the rated emergency period
At the completion of functional and full duration tests, LED indicator will display the status of the emergency luminaire when AC is present	

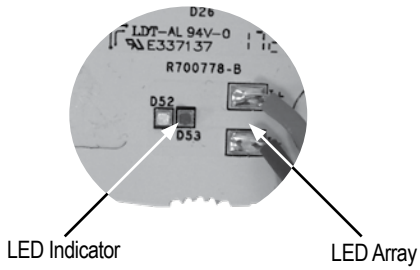

LED Signals

Indicator Color	Timing	Description
Green	1 sec ON: 1 sec OFF	Normal charging ok, Battery not yet fully charged, No fault detected, Testing ok
Green	0.25 sec ON: 0.25 sec OFF	Functional / Duration Self-Test on-going
Green	Steady ON	Charging ok, Battery fully charged, No fault detected, Testing ok
Red	1 sec ON: 1 sec OFF	Fault condition. Installation issue. Battery is reverse, not connected or shorted. Functional test failure, full duration test failure
LED Indicators OFF, LED Array ON	LED Indicator Lights (Red and Green) OFF	No AC, Emergency mode ON

① All values are typical (tolerance +/-10%).

Industrial Mercmaster™ LED Generation 3 Series Luminaires

Standard or with Emergency Battery Backup

Ordinary Locations

NEC/CEC/NOM Standard Model: Type 3R, 4, 4X | IP66/IP67 | IK08 | Suitable for Use in Wet Locations | Marine Outside Type (Salt Water)
NEC/CEC Emergency Battery Backup Model: Type 3R, 4, 4X | IP66/IP67 | IK08 | Suitable for Use in Wet Locations
IECEE CB Standard Model: IP66 | IK08
Notable: American Bureau of Shipping (ABS) Certified | International Dark Sky (IDA) Approved

NEC/CEC Ambient Temperature — All Models ①

Model	Maximum Ambient Temperature °C (°F)
IMLGL3	65 (149)
IMLGL3 - A	75 (167)
IMLGL5	65 (149)
IMLGL5 - A	75 (167)
IMLGL7	65 (149)
IMLGL7 - A	75 (167)
IMLGL9	65 (149)
IMLGL9 - A	70 (158)
IMLGH9 - A	70 (158)
IMLGH1	65 (149)
IMLGH1 - A	70 (158)
IMLGH3	65 (149)
IMLGH3 - A	70 (158)
IMLGH6	65 (149)
IMLGX1	60 (140)
IMLGX5	55 (131)

IECCC Temperature Codes — All Models ②

Model ②	Maximum Ambient Temperature °C (°F)
IMLGL3	65 (149)
IMLGL5	65 (149)
IMLGL7	65 (149)
IMLGL7-A	70 (158)
IMLGL9	65 (149)
IMLGH9-A	70 (158)
IMLGH1	65 (149)
IMLGH1 - A	70 (158)
IMLGH3	65 (149)
IMLGH6	65 (149)
IMLGX1	60 (140)
IMLGX5	55 (131)

① Ambient Temperature Range: -40 °C to +65 °C (-40 °F to +149 °F).
② For 125-170 Vdc, operating Temp. range is -40°C to +55 °C (For IECEx/ATEX only). NEC/CEC operating temp remains -40°C to +65°C (-40 °F to +149 °F) for full Vdc range.

Industrial Mercmaster™ LED Generation 3 Series Luminaires

Standard

Ordinary Locations

NEC/CEC/NOM Standard Model: Type 3R, 4, 4X | IP66/IP67 | IK08 | Suitable for Use in Wet Locations | Marine Outside Type (Salt Water)
IECEE CB Standard Model: IP66 | IK08
Notable: American Bureau of Shipping (ABS) Certified | International Dark Sky (IDA) Approved

Catalog Number for Driver Housing and Globe or Refractor — Standard Model

Lumen Level	CCT	Optics	Clear Polycarbonate Globe ①②③④⑤	Polycarbonate Diffused Globe ①②③④⑤	Clear Glass Globe ①②③④⑤	Refractor ①②③④⑤
3500	5000K	Type I	**IMLGL3CP1**	**IMLGL3CD1**	**IMLGL3CG1**	—
		Type III	**IMLGL3CP3**	**IMLGL3CD3**	**IMLGL3CG3**	—
		Type V	**IMLGL3CP5**	**IMLGL3CD5**	**IMLGL3CG5**	**IMLGL3CJ5**
		Type V Wide	**IMLGL3CPW**	**IMLGL3CDW**	**IMLGL3CGW**	—
5500	5000K	Type I	**IMLGL5CP1**	**IMLGL5CD1**	**IMLGL5CG1**	—
		Type III	**IMLGL5CP3**	**IMLGL5CD3**	**IMLGL5CG3**	—
		Type V	**IMLGL5CP5**	**IMLGL5CD5**	**IMLGL5CG5**	**IMLGL5CJ5**
		Type V Wide	**IMLGL5CPW**	**IMLGL5CDW**	**IMLGL5CGW**	—
7500	5000K	Type I	**IMLGL7CP1**	**IMLGL7CD1**	**IMLGL7CG1**	—
		Type III	**IMLGL7CP3**	**IMLGL7CD3**	**IMLGL7CG3**	—
		Type V	**IMLGL7CP5**	**IMLGL7CD5**	**IMLGL7CG5**	**IMLGL7CJ5**
		Type V Wide	**IMLGL7CPW**	**IMLGL7CDW**	**IMLGL7CGW**	—
9500 ⑥	5000K	Type I	**IMLGL9CP1/IMLGH9CP1**	**IMLGL9CD1/IMLGH9CD1**	**IMLGL9CG1/IMLGH9CG1**	—
		Type III	**IMLGL9CP3/ IMLGH9CP3**	**IMLGL9CD3/IMLGH9CD3**	**IMLGL9CG3/IMLGH9CG3**	—
		Type V	**IMLGL9CP5/IMLGH9CP5**	**IMLGL9CD5/IMLGH9CD5**	**IMLGL9CG5/IMLGH9CG5**	**IMLGL9CJ5/IMLGH9CJ5**
		Type V Wide	**IMLGL9CPW/IMLGH9CPW**	**IMLGL9CDW/IMLGH9CDW**	**IMLGL9CGW/IMLGH9CGW**	—
11,500	5000K	Type I	**IMLGH1CP1**	**IMLGH1CD1**	**IMLGH1CG1**	—
		Type III	**IMLGH1CP3**	**IMLGH1CD3**	**IMLGH1CG3**	—
		Type V	**IMLGH1CP5**	**IMLGH1CD5**	**IMLGH1CG5**	**IMLGH1CJ5**
		Type V Wide	**IMLGH1CPW**	**IMLGH1CDW**	**IMLGH1CGW**	—
14,500	5000K	Type I	**IMLGH3CP1**	**IMLGH3CD1**	**IMLGH3CG1**	—
		Type III	**IMLGH3CP3**	**IMLGH3CD3**	**IMLGH3CG3**	—
		Type V	**IMLGH3CP5**	**IMLGH3CD5**	**IMLGH3CG5**	**IMLGH3CJ5**
		Type V Wide	**IMLGH3CPW**	**IMLGH3CDW**	**IMLGH3CGW**	—
17,500	5000K	Type I	**IMLGH6CP1**	**IMLGH6CD1**	**IMLGH6CG1**	—
		Type III	**IMLGH6CP3**	**IMLGH6CD3**	**IMLGH6CG3**	—
		Type V	**IMLGH6CP5**	**IMLGH6CD5**	**IMLGH6CG5**	**IMLGH6CJ5**
		Type V Wide	**IMLGH6CPW**	**IMLGH6CDW**	**IMLGH6CGW**	—
20,000	5000K	Type I	**IMLGX1CP1**	**IMLGX1CD1**	**IMLGX1CG1**	—
		Type III	**IMLGX1CP3**	**IMLGX1CD3**	**IMLGX1CG3**	—
		Type V	**IMLGX1CP5**	**IMLGX1CD5**	**IMLGX1CG5**	**IMLGX1CJ5**
		Type V Wide	**IMLGX1CPW**	**IMLGX1CDW**	**IMLGX1CGW**	—
24,000	5000K	Type I	**IMLGX5CP1**	**IMLGX5CD1**	**IMLGX5CG1**	—
		Type III	**IMLGX5CP3**	**IMLGX5CD3**	**IMLGX5CG3**	—
		Type V	**IMLGX5CP5**	**IMLGX5CD5**	**IMLGX5CG5**	**IMLGX5CJ5**
		Type V Wide	**IMLGX5CPW**	**IMLGX5CDW**	**IMLGX5CGW**	—

*① For 120-277 Vac, 50/60 Hz, add suffix **-BU** to catalog number. For 347-480 Vac, 50/60 Hz, add suffix **-BH** to catalog number.*
*② For other CCT options, change the 7th digit in part number from "**C**" to "**W**" for Warm 3000K CCT or "**N**" for Neutral 4000K CCT. Example: IMLGL7**C**P5BU to "**W**" for Warm, IMLGL7**W**P5BU.*
③ Guards are available for fixtures with globe or refractor. See following pages for accessory ordering information.
*④ For fusing add "**F**" to end of catalog number. Example: IMLGL7CP5BU**F**.*
*⑤ Use of fuse voids Marine Outside Type (Salt Water) rating. Only available for cCSAus rating. For additional 10 kV of surge, add "**S**" to the end of catalog number. Example: IMLGH6CD5BU**S**.*
*⑥ IMLGH9 only available with certified High Ambient option (-**A**).*

Industrial Mercmaster™ LED Generation 3 Series Luminaires

With Emergency Battery Backup

Ordinary Locations

NEC/CEC Emergency Battery Backup Model: Type 3R, 4, 4X | IP66/IP67 | IK08 | Suitable for Use in Wet Locations
Notable: American Bureau of Shipping (ABS) Certified | International Dark Sky (IDA) Approved

Catalog Number for Driver Housing and Globe — Emergency Battery Backup Model

Lumen Level	CCT	Optics	Clear Polycarbonate Globe ①②		Polycarbonate Diffused Globe ①②		Clear Glass Globe ①②	
			90 Min	180 Min	90 Min	180 Min	90 Min	180 Min
3500	5000K	Type I	**IMLGL3CP1BUH**	**IMLGL3CP1BUE**	**IMLGL3CD1BUH**	**IMLGL3CD1BUE**	**IMLGL3CG1BUH**	**IMLGL3CG1BUE**
		Type III	**IMLGL3CP3BUH**	**IMLGL3CP3BUE**	**IMLGL3CD3BUH**	**IMLGL3CD3BUE**	**IMLGL3CG3BUH**	**IMLGL3CG3BUE**
		Type V	**IMLGL3CP5BUH**	**IMLGL3CP5BUE**	**IMLGL3CD5BUH**	**IMLGL3CD5BUE**	**IMLGL3CG5BUH**	**IMLGL3CG5BUE**
		Type V Wide	**IMLGL3CPWBUH**	**IMLGL3CPWBUE**	**IMLGL3CDWBUH**	**IMLGL3CDWBUE**	**IMLGL3CGWBUH**	**IMLGL3CGWBUE**
5500	5000K	Type I	**IMLGL5CP1BUH**	**IMLGL5CP1BUE**	**IMLGL5CD1BUH**	**IMLGL5CD1BUE**	**IMLGL5CG1BUH**	**IMLGL5CG1BUE**
		Type III	**IMLGL5CP3BUH**	**IMLGL5CP3BUE**	**IMLGL5CD3BUH**	**IMLGL5CD3BUE**	**IMLGL5CG3BUH**	**IMLGL5CG3BUE**
		Type V	**IMLGL5CP5BUH**	**IMLGL5CP5BUE**	**IMLGL5CD5BUH**	**IMLGL5CD5BUE**	**IMLGL5CG5BUH**	**IMLGL5CG5BUE**
		Type V Wide	**IMLGL5CPWBUH**	**IMLGL5CPWBUE**	**IMLGL5CDWBUH**	**IMLGL5CDWBUE**	**IMLGL5CGWBUH**	**IMLGL5CGWBUE**

*① For other CCT options, change the 7th digit in part number from "**C**" to "**W**" for Warm 3000K CCT or "**N**" for Neutral 4000K CCT. Example: IMLGL7**C**P5BUH to "**W**" for Warm, IMLGL7**W**P5BUH.*
② Guards are available. See following pages for accessory ordering information.

Industrial Mercmaster™ LED Generation 3 Series Luminaires

Standard or with Emergency Battery Backup

Ordinary Locations

NEC/CEC/NOM Standard Model: Type 3R, 4, 4X | IP66/IP67 | IK08 | Suitable for Use in Wet Locations | Marine Outside Type (Salt Water)
NEC/CEC Emergency Battery Backup Model: Type 3R, 4, 4X | IP66/IP67 | IK08 | Suitable for Use in Wet Locations
IECEE CB Standard Model: IP66 | IK08
Notable: American Bureau of Shipping (ABS) Certified | International Dark Sky (IDA) Approved

Mounting Hoods — All Models

	Hub Size	Weight in kg (lbs)	Catalog Number
Pendant — One Hub, Rigid Mounting			
	3/4" NPT	1.0 (2.3)	**KPA-75**
	1" NPT		**KPA-100**
	M20		**KPA-M20**
Watertight Pendant Hood — One Hub, Rigid Mounting			
	3/4" NPT	1.1 (2.4)	**KPA-75-WT**
	1" NPT		**KPA-100-WT**
	M20		**KPA-WT-M20**
Pendant Cone — One Hub, Rigid Mounting			
	3/4" NPT	1.1 (2.5)	**KPCH-75**
	1" NPT		**KPCH-100**
	M20		**KPCH-M20**
Trunnion — Five Hubs, Four Close-Up Plugs			
	3/4" NPT	6.1 (13.4)	**KPCT-75**
	1" NPT		**KPCT-100**
	M20		**KPCT-M20**
Ceiling — Five Hubs, Four Close-Up Plugs			
	3/4" NPT	1.4 (3.0)	**KPC-75**
	1" NPT		**KPC-100**
	M20		**KPC-M20**
Wall — Five Hubs, Four Close-Up Plugs			
	3/4" NPT	1.8 (4.0)	**KPWB-75**
	1" NPT		**KPWB-100**
	M20		**KPWB-M20**
25° Stanchion — One Hub			
	1-1/4" NPT	1.5 (3.3)	**KPS-125**
	1-1/2" NPT		**KPS-150**
90° Stanchion — One Hub			
	1-1/4" NPT	1.7 (3.8)	**KPST-125**
	1-1/2" NPT		**KPST-150**

Industrial Mercmaster™ LED Generation 3 Series Luminaires

Standard or with Emergency Battery Backup

Ordinary Locations

NEC/CEC/NOM Standard Model: Type 3R, 4, 4X | IP66/IP67 | IK08 | Suitable for Use in Wet Locations | Marine Outside Type (Salt Water)
NEC/CEC Emergency Battery Backup Model: Type 3R, 4, 4X | IP66/IP67 | IK08 | Suitable for Use in Wet Locations
IECEE CB Standard Model: IP66 | IK08
Notable: American Bureau of Shipping (ABS) Certified | International Dark Sky (IDA) Approved

Accessories and Replacement Parts — All Models

	Description	Weight in kg (lbs)	Catalog Number
Globes			
	Clear Globe — Polycarbonate	0.2 (0.5)	**VPGL-LED**
	Diffused Globe — Polycarbonate	0.2 (0.5)	**VPGL-DIFF**
	Clear Globe — Glass	0.8 (1.7)	**VPGL-GLASS**
Guard			
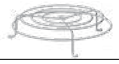	Globe Guard	0.2 (0.4)	**MGU1**
Safety Cable			
	Stainless steel	0.2 (0.4)	**LEDSC**
Visor			
	Electrostatically applied gray epoxy powder coat finish on Aluminum Visor	0.4 (0.9)	**MMVISOR**
Reflector			
	30° Angle White Polyester Reflectors	1.3 (2.7)	**CMR-4AN**
Drain Plug			
	76 mm (3") long, 1/2" NPT trade size drain assembly used to divert water existing in the conduit system	0.4 (0.9)	**LEDDR3**

Mounting Hood Adapters — All Models ①

	Manufacturer	Installed Mounting Hood	Weight in kg (lbs)	Appleton Adapter Catalog Number
	Crouse-Hinds™ Champ® ✣	Pendant: APM2/3 Ceiling: CM2/3 Flexible Pendant: HPM2	0.9 (2.00)	**MMADCHVS**
	Appleton™ Mercmaster™ II	Pendant: LPA75/100 Ceiling: LPC75/100	0.9 (2.00)	**MMADIIS**
	Crouse-Hinds™ Champ® ✣	Wall: TWM2/3 25° Angle Stanchion: JM5 90° Angle Stanchion: PM5	0.9 (2.00)	**MMADCHVA**
	Appleton™ Mercmaster™ II	Wall: LPWB75, LPWB100 25° Angle Stanchion: LPS125, LPS150	0.9 (2.00)	**MMADIIA**
	Killark™ ✧	Ceiling: VMX2B, VMX3B, VMX6B, VMX7B, VMX9B Pendant: VMA2B, VMA3B Stanchion: VMD4B, VMD5B, VMS4B, VMS5B Wall: VMB2B, VMB3B Pendant Cone: VMC2B, VMC3B	1.0 (2.3)	**MMADKVA**

① *Adapters are cCSAus rated only.*
✧ *Killark is a registered trademark of Hubbell Incorporated.*
✣ *Crouse-Hinds and Champ are a registered trademarks of Cooper Crouse-Hinds.*

Industrial Mercmaster™ LED Generation 3 Series Luminaires

Standard

Ordinary Locations

NEC/CEC/NOM Standard Model: Type 3R, 4, 4X | IP66/IP67 | IK08 | Suitable for Use in Wet Locations | Marine Outside Type (Salt Water)
IECEE CB Standard Model: IP66 | IK08
Notable: American Bureau of Shipping (ABS) Certified | International Dark Sky (IDA) Approved

Accessories and Replacement Parts — Standard Model

	Light Distribution	Weight in kg (lbs)	Catalog Number
Prismatic Glass Refractor — All Heat-Resistant ①			
	Short Prismatic Glass Refractor — NEMA Type V	1.4 (3.0)	**LPG-R5S**

	Description		Catalog Number
Guards			
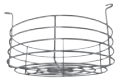	Short Refractor Guard for LPG-R5S	0.3 (0.7)	**KRG2S**

	Model	Voltage	Driver Wattage	Constant Current Settings	Catalog Number
Replacement Drivers					
	IMLGL3	BU	50 Watt	500mA	**APMS050C135UD50**
		BH		500mA	**APMS050C135HD50**
	IMLGL5	BU	50 Watt	780mA	**APMS050C135UD78**
		BH		780mA	**APMS050C135HD78**
	IMLGL7	BU	100 Watt	360mA	**APMS100C105UD36**
		BH		360mA	**APMS100C105HD36**
	IMLGL9 / IMLGH9	BU	100 Watt	480mA	**APMS100C105UD48**
		BH		480mA	**APMS100C105HD48**
	IMLGH1	BU	100 Watt	595mA	**APMS100C105UD59**
		BH		595mA	**APMS100C105HD59**
	IMLGH3	BU	150 Watt	720mA	**APMS150C105UD72**
		BH		720mA	**APMS150C105HD72**
	IMLGH6	BU	150 Watt	900mA	**APMS150C105UD90**
		BH		900mA	**APMS150C105HD90**
	IMLGX1	BU	2 x 100 Watt	520mA	**APMS100C105UD52**
		BH	2 x 100 Watt	520mA	**APMS100C105HD52**
	IMLGX5	BU	2 x 150 Watt	650mA	**APMS150C105UD65**
		BH	2 x 100 Watt	650mA	**APMS100C105HD65**

① *Glass Prismatic Refractor is cCSAus rated only.*

Industrial Mercmaster™ LED Generation 3 Series Luminaires

With Emergency Battery Backup

Ordinary Locations

NEC/CEC Emergency Battery Backup Model: Type 3R, 4, 4X | IP66/IP67 | IK08 | Suitable for Use in Wet Locations
Notable: American Bureau of Shipping (ABS) Certified | International Dark Sky (IDA) Approved

Accessories and Replacement Parts — Emergency Battery Backup Model

	Description	Weight in kg (lbs)	Catalog Number
	Replacement Battery Pack	0.7 (1.5)	**BPMLLED**
	Replacement Battery Management Module	0.7 (1.5)	**BMMLLED**
	Replacement Fuse (Emergency system)	0.2 (0.4)	**MLF5**

	Model	Voltage	Driver Wattage	Constant Current Settings	Catalog Number
Replacement Drivers					
	IMLGL3	BU	50 Watt	500mA	**APMS050C135UD50**
		BH		500mA	**APMS050C135HD50**
	IMLGL5	BU	50 Watt	780mA	**APMS050C135UD78**
		BH		780mA	**APMS050C135HD78**

Industrial Mercmaster™ LED Generation 3 Series Luminaires

Standard or with Emergency Battery Backup

Ordinary Locations

NEC/CEC/NOM Standard Model: Type 3R, 4, 4X | IP66/IP67 | IK08 | Suitable for Use in Wet Locations | Marine Outside Type (Salt Water)
NEC/CEC Emergency Battery Backup Model: Type 3R, 4, 4X | IP66/IP67 | IK08 | Suitable for Use in Wet Locations
IECEE CB Standard Model: IP66 | IK08
Notable: American Bureau of Shipping (ABS) Certified | International Dark Sky (IDA) Approved

Mounting Hood with Factory Installed Photocontrol ① — All Models

	Mounting Hood	Hub Size	Photocontrol Option	Catalog Number
	Pendant	3/4" NPT	120 V	**KPA75PC12**
			208 V, 240 V, 277 V	**KPA75PC24**
		1" NPT	120 V	**KPA100PC12**
			208 V, 240 V, 277 V	**KPA100PC24**
	Wall	3/4" NPT	120 V	**KPWB75PC12**
			208 V, 240 V, 277 V	**KPWB75PC24**
		1" NPT	120 V	**KPWB100PC12**
			208 V, 240 V, 277 V	**KPWB100PC24**
	25° Stanchion	1-1/4" NPT stanchion	120 V	**KPS125PC12**
			208 V, 240 V, 277 V	**KPS125PC24**
		1-1/2" NPT stanchion	120 V	**KPS150PC12**
			208 V, 240 V, 277 V	**KPS150PC24**
	90° Stanchion	1-1/4" NPT stanchion	120 V	**KPST125PC12**
			208 V, 240 V, 277 V	**KPST125PC24**
		1-1/2" NPT stanchion	120 V	**KPST150PC12**
			208 V, 240 V, 277 V	**KPST150PC24**

Luminaire Weights — All Models

Model	Lumen Outputs	Weight in kg (lbs)
Standard Models		
IMLGL3	3500	9.20 (20.3)
IMLGL5	5500	9.20 (20.3)
IMLGL7	7500	9.20 (20.3)
IMLGL9	9500	9.20 (20.3)
IMLGH9	9500	12.00 (26.4)
IMLGH1	11,500	12.00 (26.4)
IMLGH3	14,500	12.00 (26.4)
IMLGH6	17,500	12.00 (26.4)
IMLGX1	20,000	13.15 (29.0)
IMLGX5	25,000	13.15 (29.0)
Emergency Battery Backup Models		
IMLGL3H	3500	10.5 (23.2)
IMLGL5H	5500	10.5 (23.2)

① Fixtures with photocontrols are rated Type 3R.

Industrial Mercmaster™ LED Generation 3 Series Luminaires

Standard or with Emergency Battery Backup

Ordinary Locations

NEC/CEC/NOM Standard Model: Type 3R, 4, 4X | IP66/IP67 | IK08 | Suitable for Use in Wet Locations | Marine Outside Type (Salt Water)
NEC/CEC Emergency Battery Backup Model: Type 3R, 4, 4X | IP66/IP67 | IK08 | Suitable for Use in Wet Locations
IECEE CB Standard Model: IP66 | IK08
Notable: American Bureau of Shipping (ABS) Certified | International Dark Sky (IDA) Approved

Dimensional Drawings

IMLGL3 to IMLGL9	IMLGH6 to IMLGH9 and IMLGX1 to IMLGX5

Driver Housing

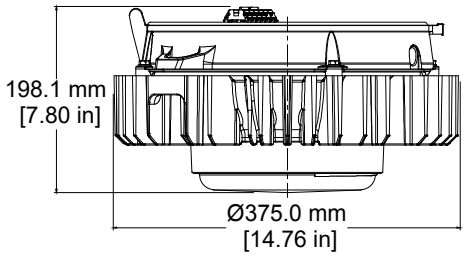

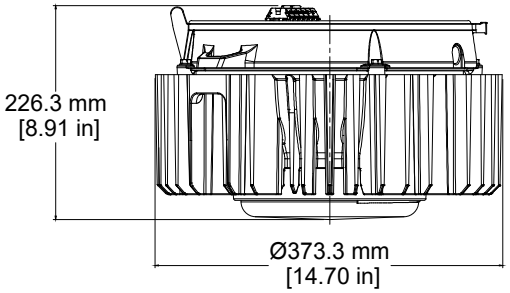

Pendant

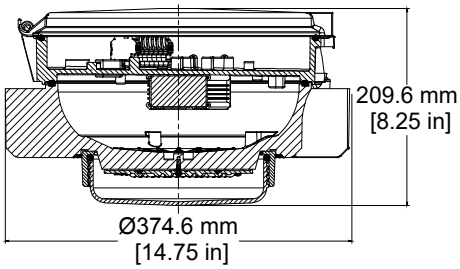

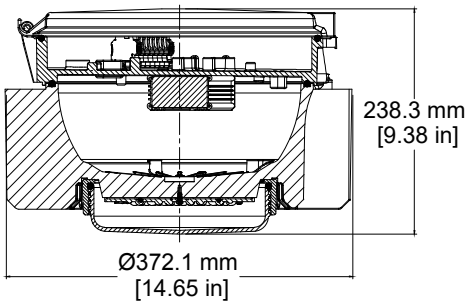

Watertight Pendant

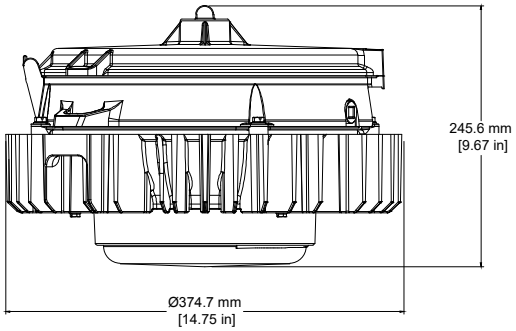

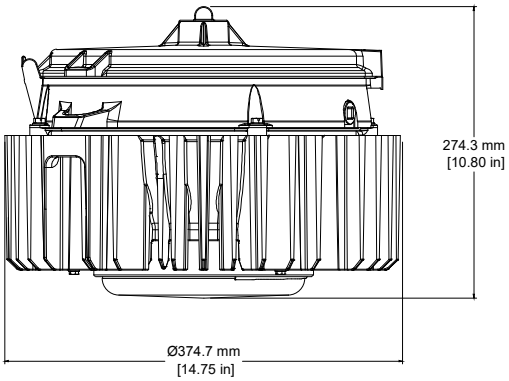

Industrial Mercmaster™ LED Generation 3 Series Luminaires

Standard or with Emergency Battery Backup

Ordinary Locations

NEC/CEC/NOM Standard Model: Type 3R, 4, 4X | IP66/IP67 | IK08 | Suitable for Use in Wet Locations | Marine Outside Type (Salt Water)
NEC/CEC Emergency Battery Backup Model: Type 3R, 4, 4X | IP66/IP67 | IK08 | Suitable for Use in Wet Locations
IECEE CB Standard Model: IP66 | IK08
Notable: American Bureau of Shipping (ABS) Certified | International Dark Sky (IDA) Approved

Dimensional Drawings

IMLGL3 to IMLGL9

Pendant Cone

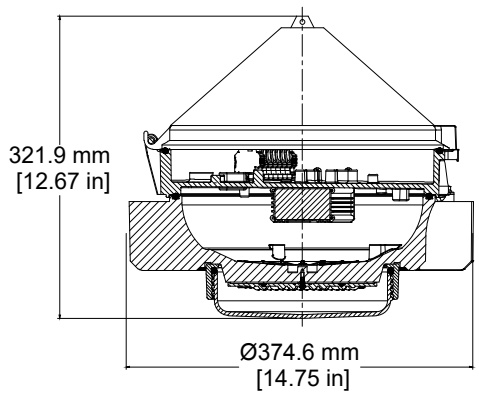

Ceiling

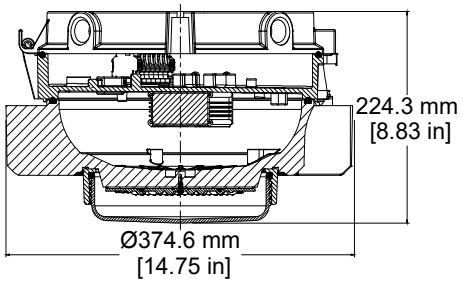

Wall Mount

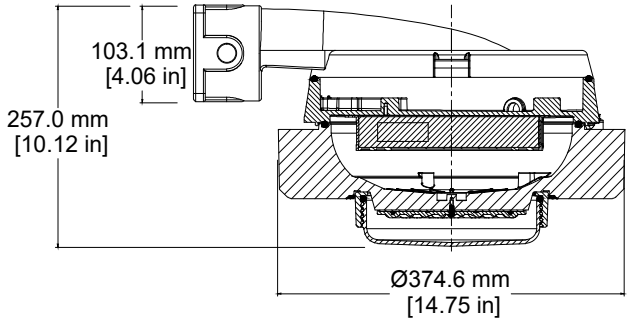

IMLGH6 to IMLGH9 and IMLGX1 to IMLGX5

Pendant Cone

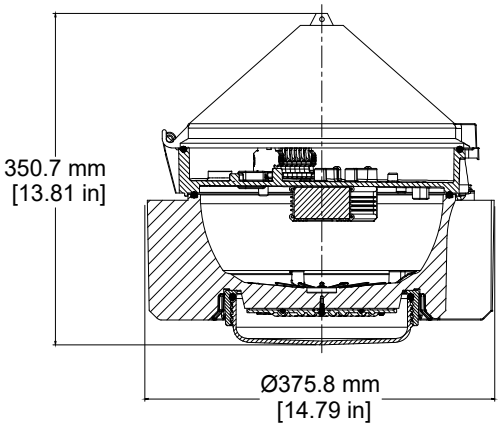

Ceiling

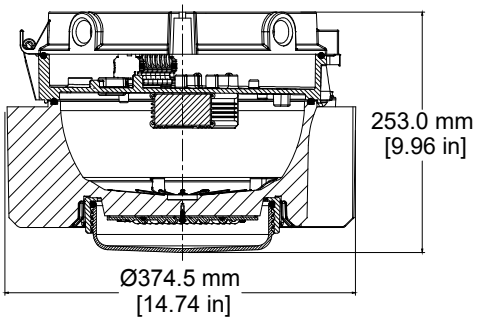

Wall Mount

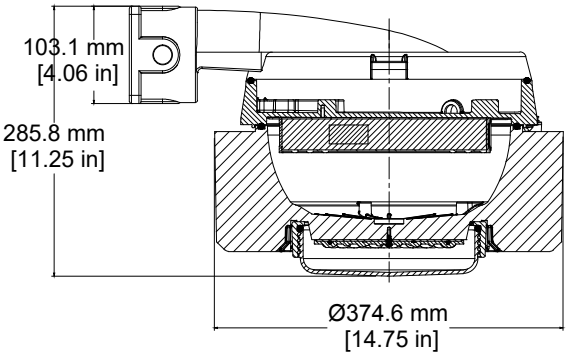

Industrial Mercmaster™ LED Generation 3 Series Luminaires

Standard or with Emergency Battery Backup

Ordinary Locations

NEC/CEC/NOM Standard Model: Type 3R, 4, 4X | IP66/IP67 | IK08 | Suitable for Use in Wet Locations | Marine Outside Type (Salt Water)
NEC/CEC Emergency Battery Backup Model: Type 3R, 4, 4X | IP66/IP67 | IK08 | Suitable for Use in Wet Locations
IECEE CB Standard Model: IP66 | IK08
Notable: American Bureau of Shipping (ABS) Certified | International Dark Sky (IDA) Approved

Dimensional Drawings

IMLGL3 to IMLGL9	IMLGH6 to IMLGH9 and IMLGX1 to IMLGX5

Trunnion Mount

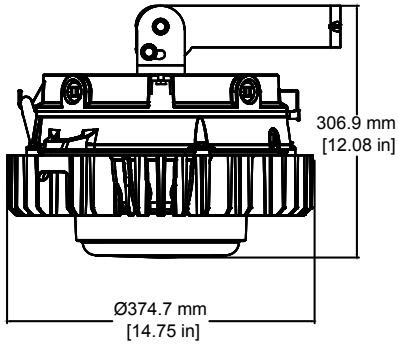

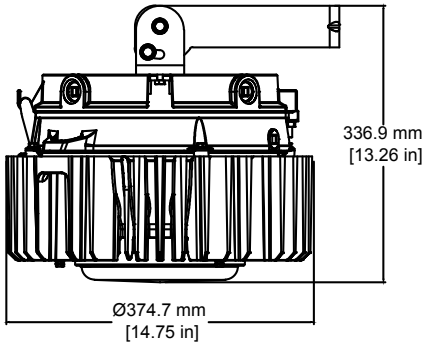

25° Stanchion Mount

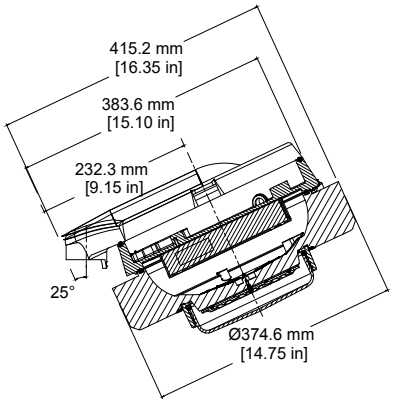

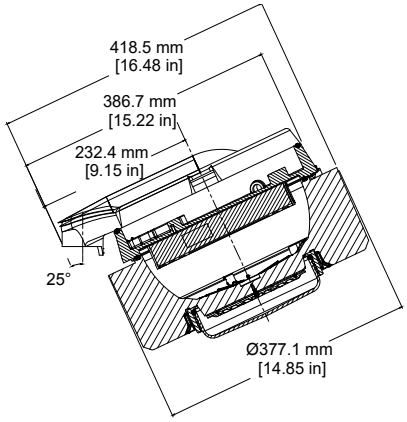

90° Stanchion Mount

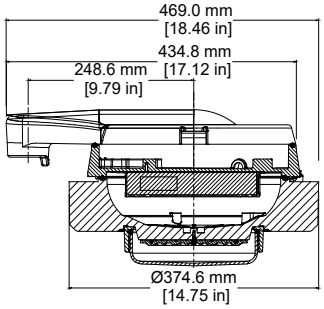

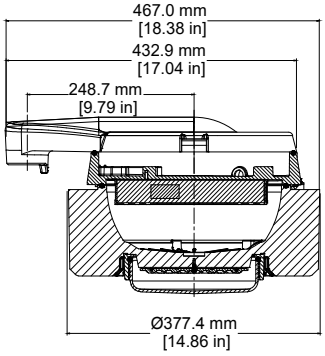

Industrial Mercmaster™ LED Generation 3 Series Luminaires

Standard or with Emergency Battery Backup

Ordinary Locations

NEC/CEC/NOM Standard Model: Type 3R, 4, 4X | IP66/IP67 | IK08 | Suitable for Use in Wet Locations | Marine Outside Type (Salt Water)
NEC/CEC Emergency Battery Backup Model: Type 3R, 4, 4X | IP66/IP67 | IK08 | Suitable for Use in Wet Locations
IECEE CB Standard Model: IP66 | IK08
Notable: American Bureau of Shipping (ABS) Certified | International Dark Sky (IDA) Approved

Dimensional Drawings

IMLGL3 to IMLGL9	IMLGH6 to IMLGH9 and IMLGX1 to IMLGX5

Driver Housing with Short Prismatic Glass Refractor ①

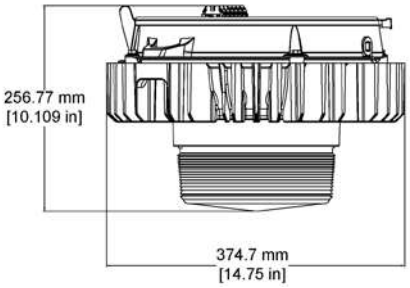

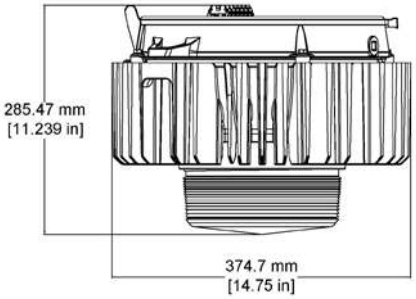

① *For additional configurations dimensions, review the Product Drawing configurator page on the website.*

Industrial Mercmaster™ LED Generation 3 Series Luminaires

Standard or with Emergency Battery Backup

Ordinary Locations

NEC/CEC/NOM Standard Model: Type 3R, 4, 4X | IP66/IP67 | IK08 | Suitable for Use in Wet Locations | Marine Outside Type (Salt Water)
NEC/CEC Emergency Battery Backup Model: Type 3R, 4, 4X | IP66/IP67 | IK08 | Suitable for Use in Wet Locations
IECEE CB Standard Model: IP66 | IK08
Notable: American Bureau of Shipping (ABS) Certified | International Dark Sky (IDA) Approved

Photometric Data — DATA SHOWN IS ABSOLUTE

Type V, Clear Polycarbonate, 5000K CCT

REPORT NUMBER: **MLGAL33CP5**

Luminaire Lumens 3,783

POLAR CANDELA DISTRIBUTION

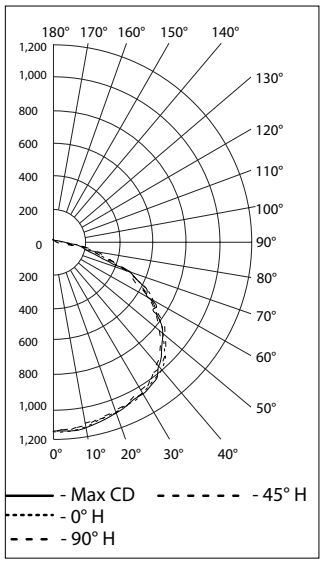

ISOFOOT CANDLE PLOT

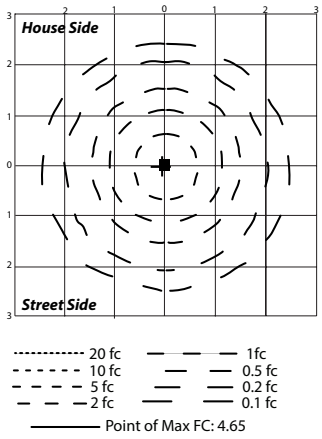

ZONAL LUMEN SUMMARY

Zone	Lumens	% Luminaire
0-30	942.7	24.9%
0-40	1,591.7	42.1%
0-60	2,979.8	78.8%
60-90	788.2	20.8%
70-100	271.6	7.2%
90-120	13.9	0.4%
0-90	3,768.1	99.6%
90-180	15.1	0.4%
0-180	3,783.2	100%

LUMENS PER ZONE

Zone	Lumens	% Total	Zone	Lumens	% Total
0-10	111.3	2.9%	90-100	5.9	0.2%
10-20	322.9	8.5%	100-110	4.8	0.1%
20-30	508.4	13.4%	110-120	3.2	0.1%
30-40	649.0	17.2%	120-130	0.8	0%
40-50	713.0	18.8%	130-140	0.1	0%
50-60	675.1	17.8%	140-150	0.1	0%
60-70	522.5	13.8%	150-160	0.2	0%
70-80	221.7	5.9%	160-170	0.1	0%
80-90	44.1	1.2%	170-180	0.0	0%

Type V, Clear Polycarbonate, 5000K CCT

REPORT NUMBER: **MLGAL53CP5**

Luminaire Lumens 5,660

POLAR CANDELA DISTRIBUTION

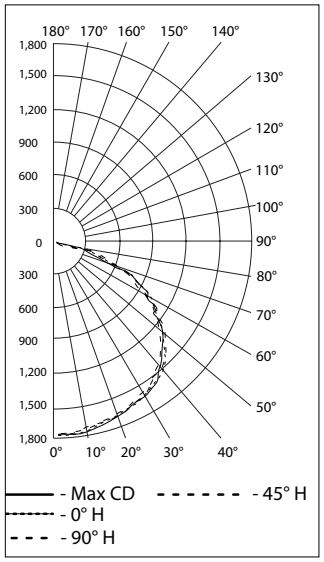

ISOFOOT CANDLE PLOT

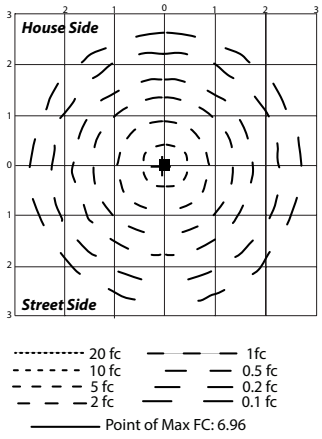

ZONAL LUMEN SUMMARY

Zone	Lumens	% Luminaire
0-30	1,410.3	24.9%
0-40	2,381.3	42.1%
0-60	4,457.9	78.8%
60-90	1,179.2	20.8%
70-100	406.4	7.2%
90-120	20.7	0.4%
0-90	5,637.2	99.6%
90-180	22.7	0.4%
0-180	5,659.8	100%

LUMENS PER ZONE

Zone	Lumens	% Total	Zone	Lumens	% Total
0-10	166.5	2.9%	90-100	8.8	0.2%
10-20	483.1	8.5%	100-110	7.1	0.1%
20-30	760.6	13.4%	110-120	4.8	0.1%
30-40	971.0	17.2%	120-130	1.2	0%
40-50	1,0667.7	18.8%	130-140	0.1	0%
50-60	1,010.0	17.8%	140-150	0.2	0%
60-70	781.6	13.8%	150-160	0.2	0%
70-80	331.7	5.9%	160-170	0.2	0%
80-90	65.9	1.2%	170-180	0.1	0%

Industrial Mercmaster™ LED Generation 3 Series Luminaires

Standard

Ordinary Locations

NEC/CEC/NOM Standard Model: Type 3R, 4, 4X | IP66/IP67 | IK08 | Suitable for Use in Wet Locations | Marine Outside Type (Salt Water)
IECEE CB Standard Model: IP66 | IK08
Notable: American Bureau of Shipping (ABS) Certified | International Dark Sky (IDA) Approved

Photometric Data — DATA SHOWN IS ABSOLUTE

Type V, Clear Polycarbonate, 5000K CCT

REPORT NUMBER: **MLGAL73CP5**

Luminaire Lumens 8,524

POLAR CANDELA DISTRIBUTION

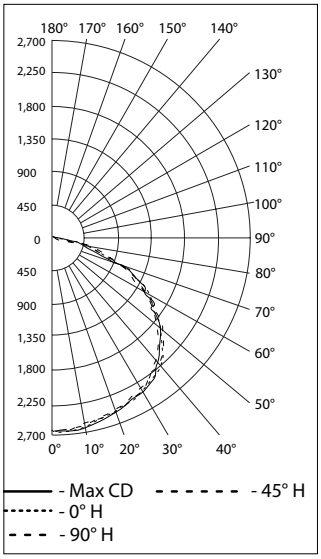

ISOFOOT CANDLE PLOT

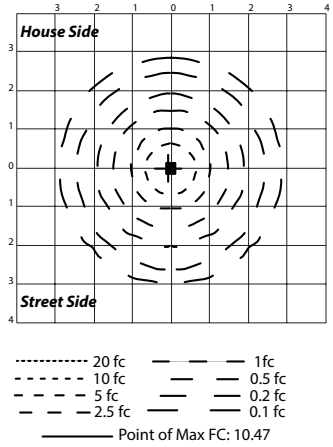

ZONAL LUMEN SUMMARY

Zone	Lumens	% Luminaire
0-30	2,123.9	24.9%
0-40	3,586.2	42.1%
0-60	6,713.7	78.8%
60-90	1,775.9	20.8%
70-100	612.0	7.2%
90-120	31.2	0.4%
0-90	8,489.6	99.6%
90-180	34.1	0.4%
0-180	8,523.7	100%

LUMENS PER ZONE

Zone	Lumens	% Total	Zone	Lumens	% Total
0-10	250.8	2.9%	90-100	13.2	0.2%
10-20	727.6	8.5%	100-110	10.8	0.1%
20-30	1,145.5	13.4%	110-120	7.2	0.1%
30-40	1,462.3	17.2%	120-130	1.7	0%
40-50	1,606.4	18.8%	130-140	0.1	0%
50-60	1,521.0	17.8%	140-150	0.3	0%
60-70	1,177.1	13.8%	150-160	0.4	0%
70-80	499.5	5.9%	160-170	0.3	0%
80-90	99.3	1.2%	170-180	0.1	0%

Type V, Clear Polycarbonate, 5000K CCT

REPORT NUMBER: **MLGAH93CP5 / MLGAL93CP5**

Luminaire Lumens 10,845

POLAR CANDELA DISTRIBUTION

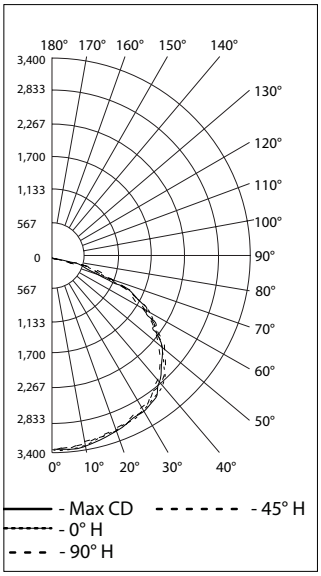

ISOFOOT CANDLE PLOT

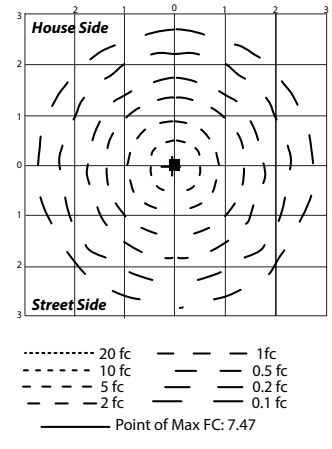

ZONAL LUMEN SUMMARY

Zone	Lumens	% Luminaire
0-30	2,709.1	25%
0-40	4,571.0	42.1%
0-60	8,535.2	78.7%
60-90	2,272.7	21%
70-100	806.0	7.4%
90-120	33.3	0.3%
0-90	10,808.0	99.7%
90-180	37.2	0.3%
0-180	10,845.2	100%

LUMENS PER ZONE

Zone	Lumens	% Total	Zone	Lumens	% Total
0-10	319.9	2.9%	90-100	17.5	0.2%
10-20	928.5	8.6%	100-110	9.9	0.1%
20-30	1,460.7	13.5%	110-120	5.9	0.1%
30-40	1,861.9	17.2%	120-130	1.6	0%
40-50	2,042.3	18.8%	130-140	0.7	0%
50-60	1,922.0	17.7%	140-150	0.6	0%
60-70	1,484.2	13.7%	150-160	0.5	0%
70-80	649.2	6.0%	160-170	0.3	0%
80-90	139.3	1.3%	170-180	0.1	0%

Industrial Mercmaster™ LED Generation 3 Series Luminaires

Standard

Ordinary Locations

NEC/CEC/NOM Standard Model: Type 3R, 4, 4X | IP66/IP67 | IK08 | Suitable for Use in Wet Locations | Marine Outside Type (Salt Water)
IECEE CB Standard Model: IP66 | IK08
Notable: American Bureau of Shipping (ABS) Certified | International Dark Sky (IDA) Approved

Photometric Data — DATA SHOWN IS ABSOLUTE

Type V, Clear Polycarbonate, 5000K CCT

REPORT NUMBER: **MLGAH13CP5**

Luminaire Lumens 13,204

POLAR CANDELA DISTRIBUTION

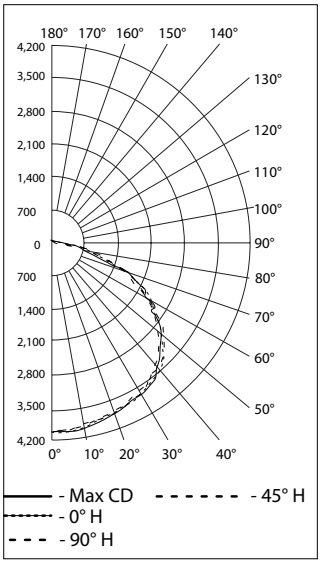

ISOFOOT CANDLE PLOT

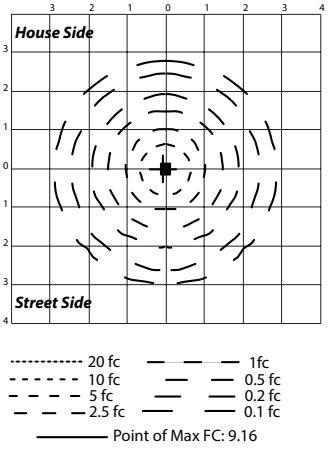

ZONAL LUMEN SUMMARY

Zone	Lumens	% Luminaire
0-30	3,298.3	25%
0-40	5,565.1	42.1%
0-60	10,391.5	78.7%
60-90	2,767.0	21%
70-100	981.3	7.4%
90-120	40.6	0.3%
0-90	13,158.5	99.7%
90-180	45.3	0.3%
0-180	13,203.8	100%

LUMENS PER ZONE

Zone	Lumens	% Total	Zone	Lumens	% Total
0-10	389.5	2.9	90-100	21.3	0.2%
10-20	1,130.4	8.6	100-110	12.0	0.1%
20-30	1,778.4	13.5	110-120	7.2	0.1%
30-40	2,266.8	17.2	120-130	2.0	0%
40-50	2,486.4	18.8	130-140	0.8	0%
50-60	2,340.0	17.7	140-150	0.8	0%
60-70	1,807.0	13.7	150-160	0.6	0%
70-80	790.4	6.0	160-170	0.4	0%
80-90	169.6	1.3	170-180	0.1	0%

Type V, Clear Polycarbonate, 5000K CCT

REPORT NUMBER: **MLGAH33CP5**

Luminaire Lumens 15,937

POLAR CANDELA DISTRIBUTION

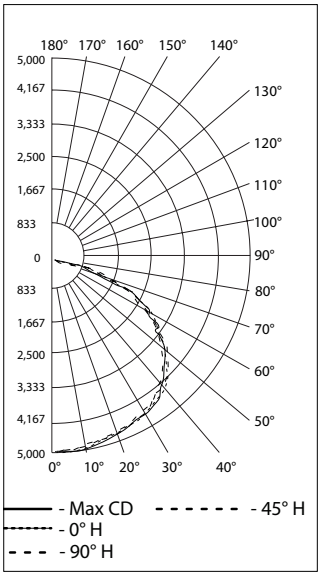

ISOFOOT CANDLE PLOT

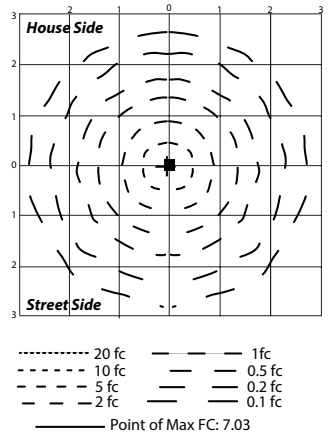

ZONAL LUMEN SUMMARY

Zone	Lumens	% Luminaire
0-30	3,981.1	25%
0-40	6,717.3	42.1%
0-60	12,542.8	78.7%
60-90	3,339.8	21%
70-100	1,184.5	7.4%
90-120	49.0	0.3%
0-90	15,882.6	99.7%
90-180	54.7	0.3%
0-180	15,937.3	100%

LUMENS PER ZONE

Zone	Lumens	% Total	Zone	Lumens	% Total
0-10	470.1	2.9%	90-100	25.7	0.2%
10-20	1,364.4	8.6%	100-110	14.5	0.1%
20-30	2,146.6	13.5%	110-120	8.7	0.1%
30-40	2,736.1	17.2%	120-130	2.4	0%
40-50	3,001.2	18.8%	130-140	1.0	0%
50-60	2,824.4	17.7%	140-150	0.9	0%
60-70	2,181.1	13.7%	150-160	0.7	0%
70-80	954.0	6.0%	160-170	0.5	0%
80-90	204.7	1.3%	170-180	0.2	0%

Industrial Mercmaster™ LED Generation 3 Series Luminaires

Standard

Ordinary Locations

NEC/CEC/NOM Standard Model: Type 3R, 4, 4X | IP66/IP67 | IK08 | Suitable for Use in Wet Locations | Marine Outside Type (Salt Water)
IECEE CB Standard Model: IP66 | IK08
Notable: American Bureau of Shipping (ABS) Certified | International Dark Sky (IDA) Approved

Photometric Data — DATA SHOWN IS ABSOLUTE

Type V, Clear Polycarbonate, 5000K CCT

REPORT NUMBER: **MLGAH63CP5**

Luminaire Lumens 19,107

POLAR CANDELA DISTRIBUTION

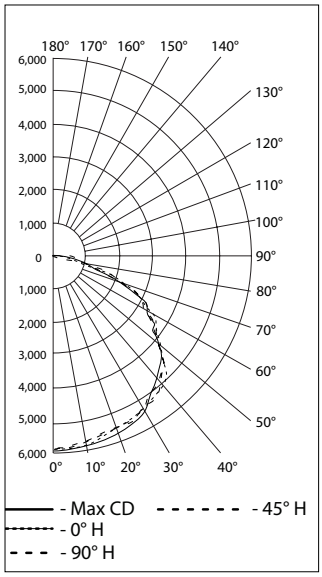

ISOFOOT CANDLE PLOT

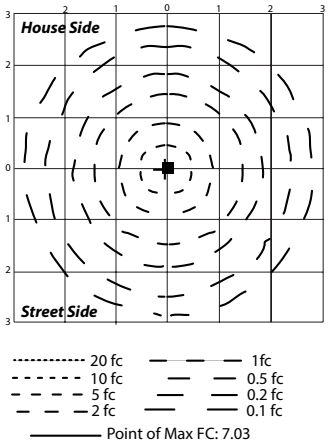

ZONAL LUMEN SUMMARY

Zone	Lumens	% Luminaire
0-30	4,772.9	25%
0-40	8,053.1	42.1%
0-60	15,037.2	78.7%
60-90	4,004.0	21%
70-100	1,420.0	7.4%
90-120	58.7	0.3%
0-90	19,041.2	99.7%
90-180	65.7	0.3%
0-180	19,107.0	100%

LUMENS PER ZONE

Zone	Lumens	% Total	Zone	Lumens	% Total
0-10	563.6	2.9%	90-100	30.8	0.2%
10-20	1,635.8	8.6%	100-110	17.4	0.1%
20-30	2,573.5	13.5%	110-120	10.5	0.1%
30-40	3,280.3	17.2%	120-130	2.9	0%
40-50	3,598.0	18.8%	130-140	1.3	0%
50-60	3,386.1	17.7%	140-150	1.2	0%
60-70	2,614.9	13.7%	150-160	0.9	0%
70-80	1,143.7	6.0%	160-170	0.6	0%
80-90	245.5	1.3%	170-180	0.2	0%

Type V, Clear Polycarbonate, 5000K CCT

REPORT NUMBER: **MLGAX1CP5BU**

Luminaire Lumens 21,019

Polar Candela Distribution

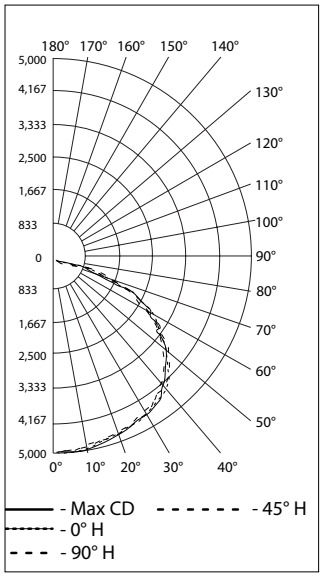

Isofoot Candle Plot

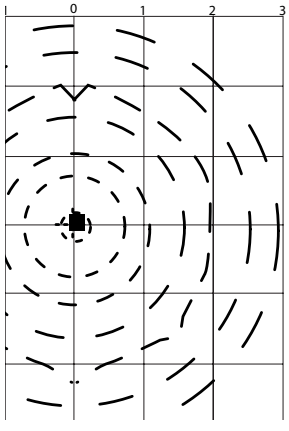

ZONAL LUMEN SUMMARY

Zone	Lumens	% Luminaire
0-30	5,119.8	24.4%
0-40	8,659.0	42.2%
0-60	16,329.0	77.7%
60-90	4,613.9	22%
70-100	1,675.4	8%
90-120	66.4	0.3%
0-90	20,942.9	99.6%
90-180	75.7	0.4%
0-180	21,018.7	100%

LUMENS PER ZONE

Zone	Lumens	% Total	Zone	Lumens	% Total
0-10	603.0	2.9%	90-100	34.1	0.2%
10-20	1,752.5	8.3%	100-110	19.8	0.1%
20-30	2,764.2	13.2%	110-120	12.4	0.1%
30-40	3,539.2	16.8%	120-130	4.2	0%
40-50	3,921.3	18.7%	130-140	1.5	0%
50-60	3,748.7	17.8%	140-150	1.3	0%
60-70	2,972.6	14.1%	150-160	1.1	0%
70-80	1,339.0	6.4%	160-170	0.8	0%
80-90	302.3	1.4%	170-180	0.3	0%

Industrial Mercmaster™ LED Generation 3 Series Luminaires

Standard

Ordinary Locations

NEC/CEC/NOM Standard Model: Type 3R, 4, 4X | IP66/IP67 | IK08 | Suitable for Use in Wet Locations | Marine Outside Type (Salt Water)
IECEE CB Standard Model: IP66 | IK08
Notable: American Bureau of Shipping (ABS) Certified | International Dark Sky (IDA) Approved

Photometric Data — DATA SHOWN IS ABSOLUTE

Type V, Clear Polycarbonate, 5000K CCT

REPORT NUMBER: **MLGAX5CP5BU**

Luminaire Lumens 24,947

POLAR CANDELA DISTRIBUTION

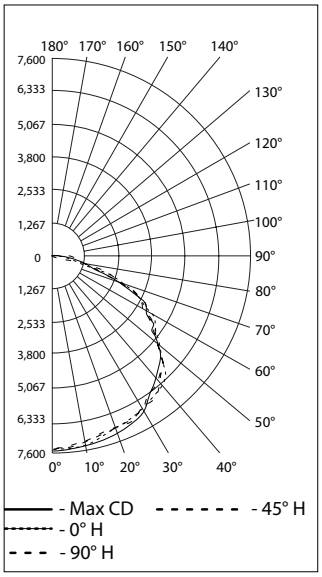

ISOFOOT CANDLE PLOT

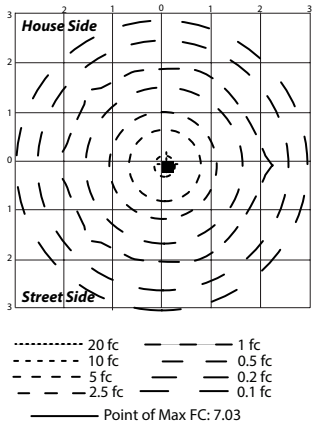

ZONAL LUMEN SUMMARY

Zone	Lumens	% Luminaire
0-30	6,052.6	24.3%
0-40	10,253.4	41.1%
0-60	19,374.1	77.7%
60-90	5,481.6	22%
70-100	1,965.5	7.9%
90-120	80.1	0.3%
0-90	24,855.7	99.6%
90-180	90.9	0.4%
0-180	24,946.6	100%

LUMENS PER ZONE

Zone	Lumens	% Total	Zone	Lumens	% Total
0-10	711.8	2.9%	90-100	41.8	0.2%
10-20	2,070.1	8.3%	100-110	24.0	0.1%
20-30	3,270.8	13.1%	110-120	14.3	0.1%
30-40	4,200.7	16.8%	120-130	5.0	0%
40-50	4,661.8	18.7%	130-140	1.5	0%
50-60	4,458.9	17.9%	140-150	1.5	0%
60-70	3,558.0	14.3%	150-160	1.4	0%
70-80	1,574.4	6.3%	160-170	0.9	0%
80-90	349.2	1.4%	170-180	0.4	0%

Industrial Mercmaster™ LED Generation 3 Series Luminaires

With Emergency Battery Backup

Ordinary Locations

NEC/CEC Emergency Battery Backup Model: Type 3R, 4, 4X | IP66/IP67 | IK08 | Suitable for Use in Wet Locations
Notable: American Bureau of Shipping (ABS) Certified | International Dark Sky (IDA) Approved

Photometric Data — DATA SHOWN IS ABSOLUTE

Type V, Clear Glass, 5000K CCT, Emergency

REPORT NUMBER: **MLGL3CG5BUH+EMR**

Luminaire Lumens 1,422

POLAR CANDELA DISTRIBUTION

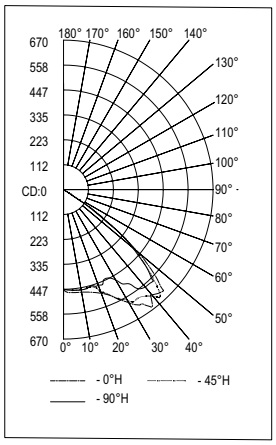

ISOFOOT CANDLE PLOT

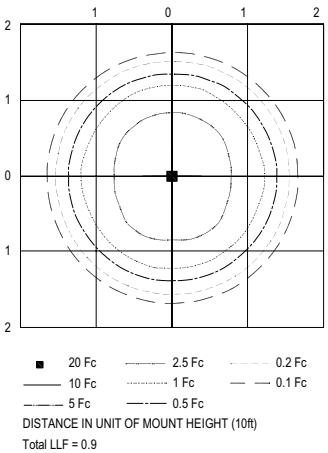

DISTANCE IN UNIT OF MOUNT HEIGHT (10ft)

Total LLF = 0.9

ZONAL LUMEN SUMMARY

Zone	Lumens	% Luminaire
0-30	410.9	28.9%
0-40	775.3	54.5%
0-60	1,405.6	98.8%
60-90	16.7	1.2%
70-100	3	0.2%
90-120	0	0%
0-90	1,422.4	100%
90-180	0	0%
0-180	1,422.4	100%

LUMENS PER ZONE

Zone	Lumens	% Total	Zone	Lumens	% Total
0-10	43.6	3.10%	90-100	0	0%
10-20	131.4	9.20%	100-110	0	0%
20-30	235.8	16.60%	110-120	0	0%
30-40	364.5	25.60%	120-130	0	0%
40-50	431.8	30.40%	130-140	0	0%
50-60	198.5	14%	140-150	0	0%
60-70	13.7	1%	150-160	0	0%
70-80	2.3	0%	160-170	0	0%
80-90	0.7	0%	170-180	0	0%

Type V, Clear Glass, 5000K CCT, Emergency

REPORT NUMBER: **MLGL5CG5BUH+EMR**

Luminaire Lumens 1,422

POLAR CANDELA DISTRIBUTION

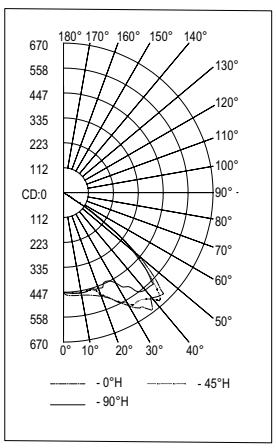

ISOFOOT CANDLE PLOT

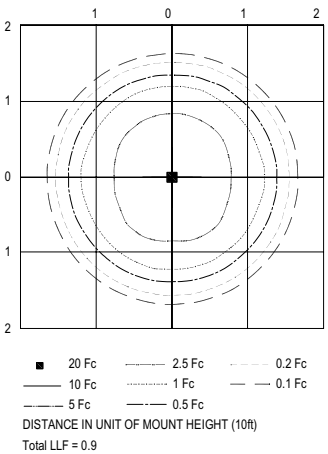

DISTANCE IN UNIT OF MOUNT HEIGHT (10ft)

Total LLF = 0.9

ZONAL LUMEN SUMMARY

Zone	Lumens	% Luminaire
0-30	410.9	28.9%
0-40	775.3	54.5%
0-60	1,405.6	98.8%
60-90	16.7	1.2%
70-100	3	0.2%
90-120	0	0%
0-90	1,422.4	100%
90-180	0	0%
0-180	1,422.4	100%

LUMENS PER ZONE

Zone	Lumens	% Total	Zone	Lumens	% Total
0-10	43.6	3.1%	90-100	0	0%
10-20	131.4	9.2%	100-110	0	0%
20-30	235.8	16.6%	110-120	0	0%
30-40	364.5	25.6%	120-130	0	0%
40-50	431.8	30.4%	130-140	0	0%
50-60	198.5	14%	140-150	0	0%
60-70	13.7	1%	150-160	0	0%
70-80	2.3	0%	160-170	0	0%
80-90	0.7	0%	170-180	0	0%